STANDARD PLANS FOR PUBLIC FACILITIES CONSTRUCTION

APRIL 2016

James Woodruff, City Engineer
Shannon Hansen, Assistant City Engineer – Development
Stephen Jackson, Assistant City Engineer – Capital Projects
Staff Engineers: Ryan Bankhead, Ashley Thoman, Mark Stenquist, Stacy Majewski, Amy Bean

STANDARD PLANS

FOR STREET IMPROVEMENTS

APRIL 2016

James Woodruff, City Engineer
Shannon Hansen, Assistant City Engineer – Development
Stephen Jackson, Assistant City Engineer – Capital Projects
Staff Engineers: Ryan Bankhead, Ashley Thoman, Mark Stenquist, Stacy Majewski, Amy Bean

STREET DRAWINGS INDEX

DETAIL NAME	ABBREV.	PAGE #
Pipe Zone Backfilling	BACKFILL	ST-ST-01
Restoration of Asphalt Pavement Structural Section Over Trenches	STR-RESTR	ST-ST-02
Typical Street Plan	TYP-STR	ST-ST-03
Standard Street Section	STR-XSEC	ST-ST-04
Subdivision Street Cross Sections	SUB ST XSECTION	ST-ST-05
Typical Drive Approach	TYP-DRIVE	ST-ST-06
Drive Approach at Existing Curb and Gutter	DR-APPR	ST-ST-07
Asphalt Replacement	ASPH-RPLCMNT	ST-ST-08
Curb & Gutter & Waterway	ST-CG-WW	ST-ST-09
Concrete Sidewalk	WALK-DET	ST-ST-10
Handicap Ramps	ADA RAMP	ST-ST-11
Detectable Warning Surface Paver Unit	SURFACE PAVER	ST-ST-12
Minimum Mill & Overlay Limits for Street Excavation	ASPH-RESTOR	ST-ST-13
Standard and Temporary Cul-de-sac	CULDESAC	ST-ST-14
Dead End Access Way	DEAD-END	ST-ST-15
Monument Cap and Base	MON-CAP	ST-ST-16
Street Utilities	STR-UTIL	ST-ST-17
Concrete Grade Ring Adjustment	GRADERNG	ST-ST-18
Standard Field Fence & Gate	FIELDFENCE	ST-ST-19
Standard Non Climbing Field Fence & Gate	NO CLIMB FNC	ST-ST-20
Shoulder Work with Minor Encroachment – 66 Ft ROW	SLDR 66’ ROW	ST-ST-21
Shoulder Work with Minor Encroachment – 60 Ft ROW	SLDR 60’ ROW	ST-ST-22
Lane Closure on Two Lane Road with Low Traffic Volumes	LANE CLOSURE	ST-ST-23
Lane Shift	LANE SHIFT	ST-ST-24
Temporary Mail Service	MAILBOX	ST-ST-25
Roundabout	ROUNDABOUT	ST-ST-26

Roundabout Details	ROUND DETAIL	ST-ST-27
Traffic Circle	TRAFFIC CIRCLE	ST-ST-28
Standard Crosswalk Signs and Striping	CROSSWALK	ST-ST-29

PIPE ZONE BACKFILLING

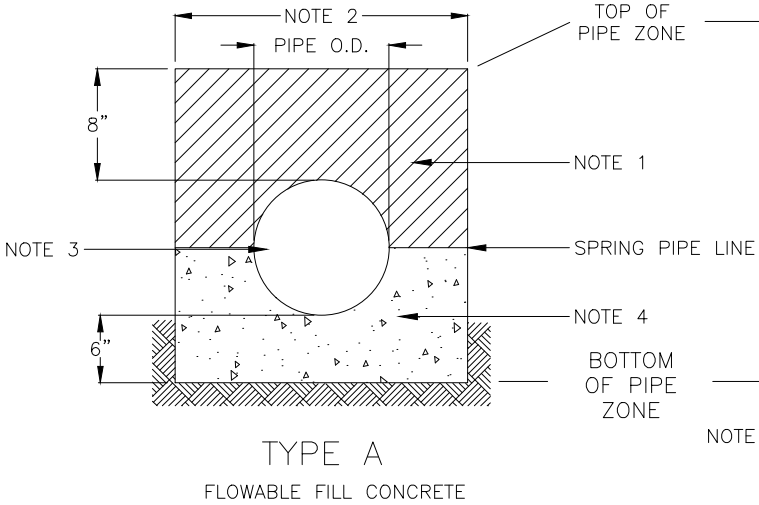

TYPE A

FLOWABLE FILL CONCRETE

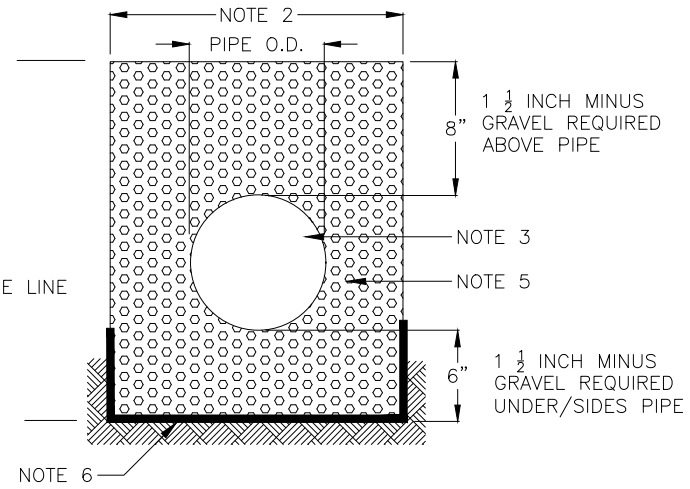

TYPE B

TYPICAL FOR PVC PIPE INSTALLATION

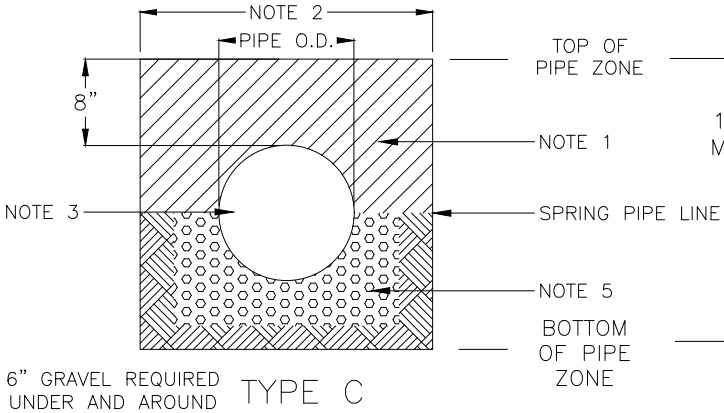

6" GRAVEL REQUIRED UNDER AND AROUND SIDES OF PIPE

TYPE C

TYPICAL FOR CONCRETE PIPE INSTALLATION

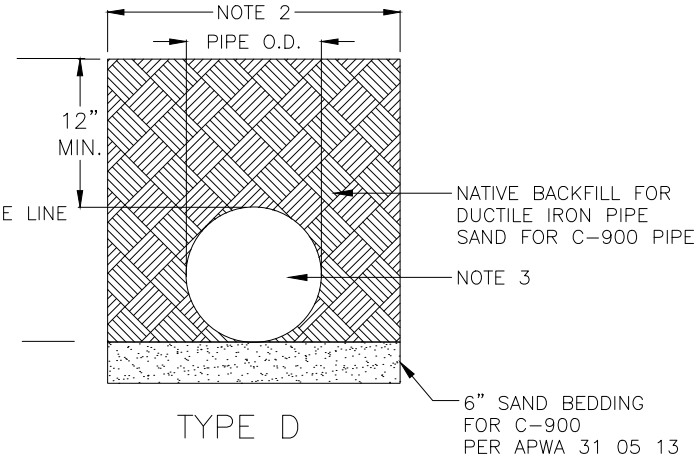

TYPE D

TYPICAL FOR DUCTILE IRON PIPE OR C-900 INSTALLATION

NOTES

1. PLACE GRADED IMPORTED 1-1/2 INCH MINUS SEWER ROCK (ASTM 4 OR 5) GRAVEL MATERIAL PER APWA 31 05 13 OR NATIVE SOIL (AS DIRECTED BY CITY ENGINEER) FOR BACKFILL IN PIPE ZONE WITH MAXIMUM LIFT THICKNESS 8-INCHES BEFORE COMPACTION. COMPACTION IS 95% OR GREATER RELATIVE TO A STANDARD PROCTOR DENSITY.

2. MINIMUM WIDTH OF TRENCH MEASURED AT THE SPRING LINE OF THE PIPE, INCLUDING ANY NECESSARY SHEATHING:

PIPE I.D.	WIDTH
LESS THAN 21"	O.D. + 12"
21" TO 44"	O.D. + 24"
GREATER THAN 44"	O.D. + 30"

I.D. MEANS INSIDE DIAMETER OF PIPE BARREL
O.D. MEANS OUTSIDE DIAMETER OF PIPE BARREL

3. INSTALL PIPE IN CENTER OF TRENCH.

4. CONCRETE: 2000 PSI MINIMUM PER APWA 03 30 04 FLOWABLE FILL PER APWA 31 05 15

5. PIPE ZONE: DO NOT USE LARGE SEWER ROCK, PEA GRAVEL OR RECYCLED RAP AGGREGATE IN THE PIPE ZONE.

6. UNDER PERFORATED PVC PIPE INSTALL MIRAFI 600X, OR ACCEPTABLE EQUAL, STABILIZATION-SEPARATION GEOTEXTILE BETWEEN SEWER ROCK AND ALL OTHER BACKFILL MATERIAL PER APWA SECTION 31 05 19.

DRAWN BY DHR	Layton City	STANDARD DRAWING
SCALE NONE		BACKFILL
DATE 9/01		ST-ST-01
REVISIONS		

RESTORATION OF ASPHALT PAVEMENT STRUCTURAL SECTION OVER TRENCHES

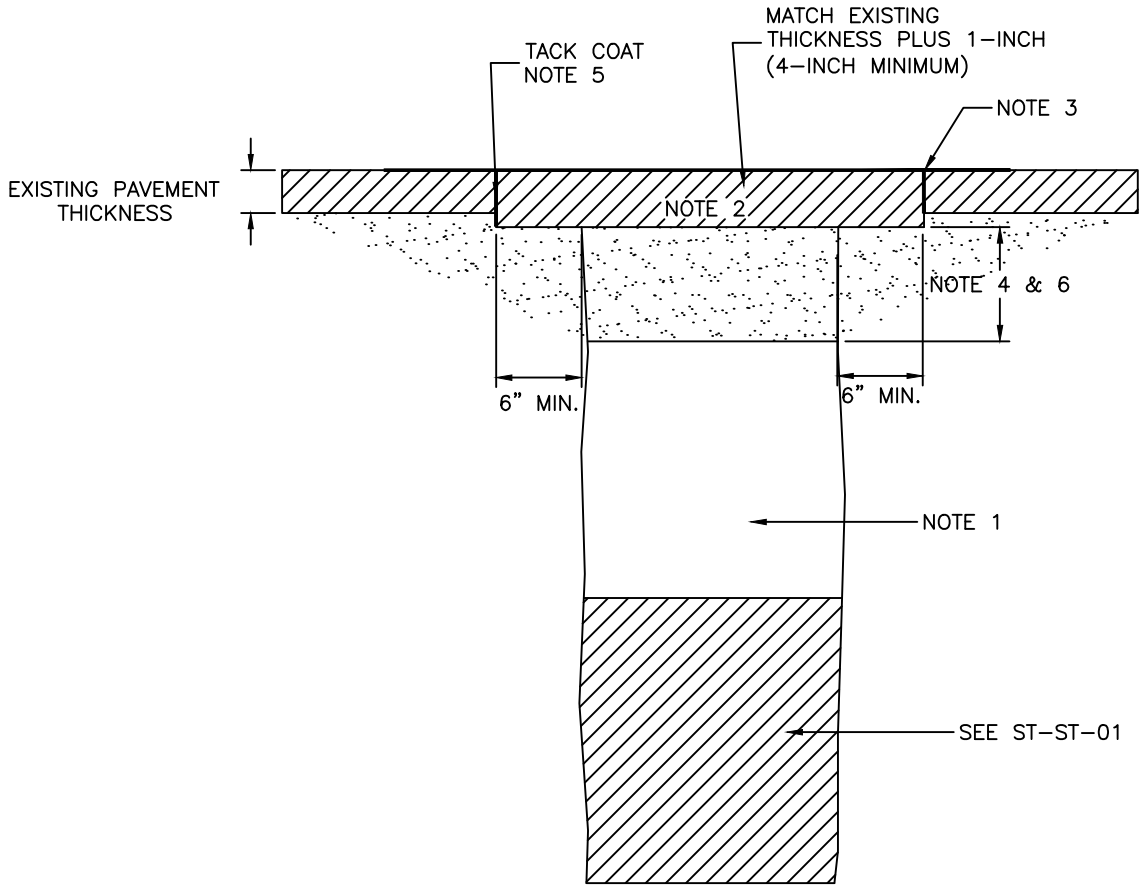

NOTES:

1. PROVIDE APWA 31 05 13 GRANULAR BORROW WELL GRADED 2-INCH MAXIMUM ABOVE PIPE ZONE. IF NATIVE MATERIAL COMPLIES WITH THE SPECIFIED BORROW, CONTRACTOR MAY USE AS APPROVED BY CITY ENGINEER. COMPACT MATERIALS IN MAXIMUM LIFTS OF 8 INCH BEFORE COMPACTION. COMPACTION IS 95% OR GREATER RELATIVE TO A MODIFIED PROCTOR DENSITY, APWA SECTION 31 23 26.

2. ASPHALT CONCRETE: USEAC-10 PG 58-28 DM - 1/2 OR AC-20 PG 64-SS DM - 3/4 AS SPECIFIED BY CITY ENGINEER AND PER APWA 32 12 05 ASPHALT CONCRETE.

3. SEAL CRACKS PER APWA 32 01 17 WITH ELASTOFLEX 65 PER ASTM D 5078.

4. UNTREATED BASE COURSE: USE GRADE 1 OR GRADE 3/4 APWA 32 11 23 AGGREGATE BASE COURSE. INSTALL PER APWA SECTION 32 05 10 WITH LIFT THICKNESS (BEFORE COMPACTION) OF 8-INCHES WITH RIDING COMPACTION EQUIPMENT AND 6-INCHES USING HANDHELD COMPACTION EQUIPMENT.

5. TACK COAT: CLEAN ALL HORIZONTAL AND VERTICAL SURFACES. APPLY FULL COVERAGE. USE EMULSIFIED ASPHALT GRADE SS-1H AT THE RATE OF 0.15 GALLONS PER SQUARE YARD PER APWA SECTION 32 12 13.13.

6. MATCH THICHNESS OF EXISTING ROADBASE OR 8" MINIMUM.

7. A 3 YEAR MORATORIUM EXISTS ON ALL NEWLY PAVED ROAD WAYS. ANY CUTS INTO A MORATORIUM MUST BE APPROVED BY THE CITY ENGINEER. THE EXISTING ASPHALT MUST BE MILLED AND PAVED A MINIMUM OF 5', OR AT THE DISCRETION OF THE CITY ENGINEER, FROM EACH EDGE OF THE TRENCH.

DRAWN BY DHR	Layton City	STANDARD DRAWING
SCALE NONE		STR-RESTR
DATE 9/01		ST-ST-02
REVISIONS		

TYPICAL STREET PLAN

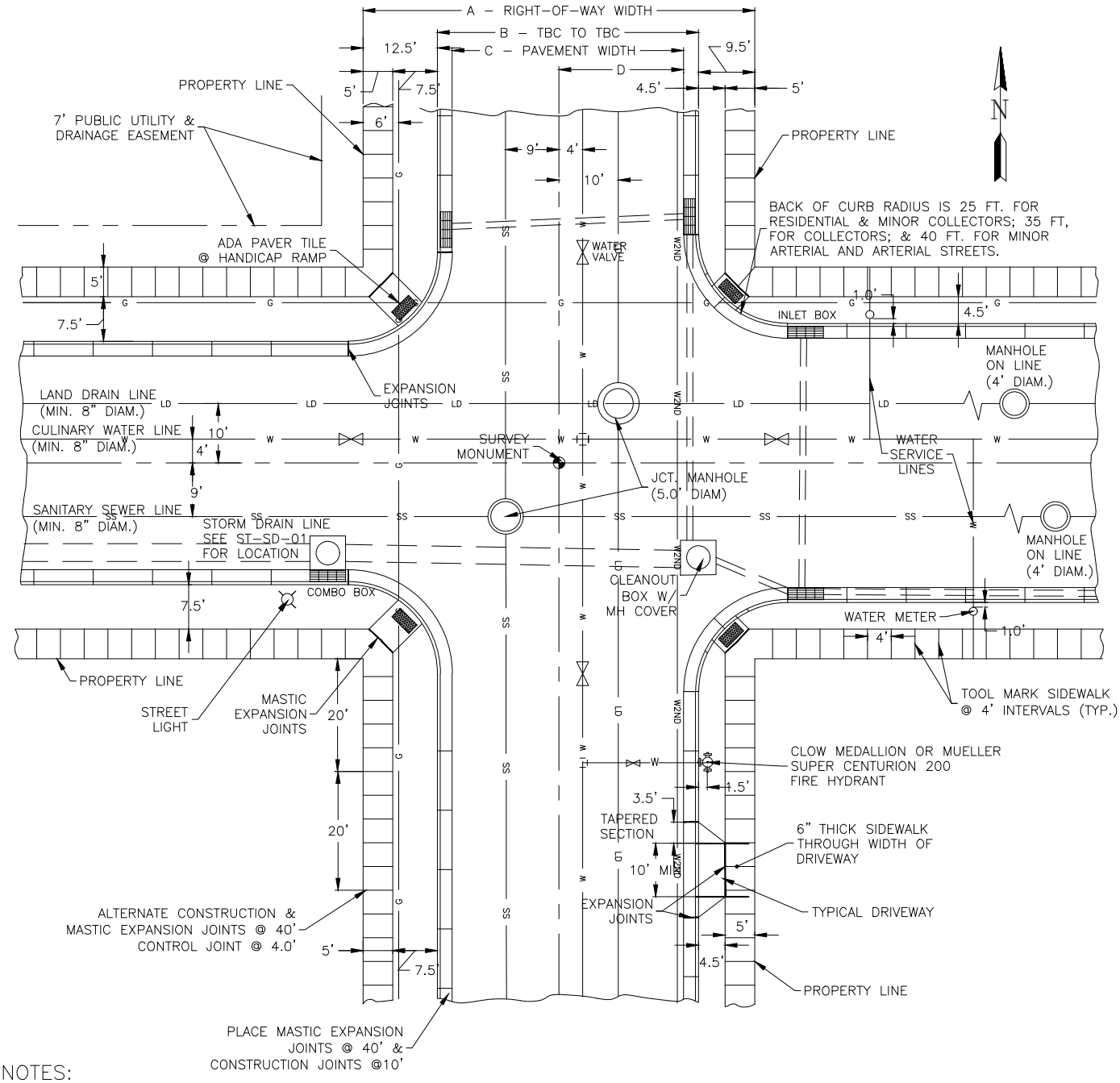

NOTES:

1. CONCRETE SHALL BE AS SPECIFIED IN APPLICABLE STANDARD DRAWINGS & SPECIFICATIONS.

2. ALL STREET CROWNS SHALL BE INSPECTED AND APPROVED BY THE CITY INSPECTOR BEFORE PAVING OPERATION BEGINS.

3. NO SANITARY SEWER OR LAND DRAIN LATERALS OUT OF MANHOLES.

4. NATURAL GAS LINES SHALL BE LAID 6.0 FT FROM PROPERTY LINE ON EITHER SIDE OF THE STREET.

5. SANITARY SEWER LINES AND CULINARY WATER LINES SHALL BE LOCATED ON OPPOSITE SIDES OF THE STREET, WITH A MINIMUM OF 10' OF SEPARATION, AS SHOWN, AT ALL TIMES AND SHALL CROSS AS FEW TIMES AS POSSIBLE.

6. WATER VALVES SHALL BE PLACED IN LINE WITH PROPERTY LINES AT INTERSECTIONS AND AS DETERMINED BY THE CITY ENGINEER.

7. SEE ST–ST–04 AND ST–ST–05 FOR WIDTHS ON ITEMS A–D AS WELL AS PROPER USE OF 4.5' AND 7.5' WIDTH PARK STRIPS.

8. THIS DRAWING SHALL BE CONSIDERED A PART OF ALL DEVELOPMENT UTILITY CONSTRUCTION AND THE CITY'S STANDARD SPECIFICATIONS.

9. FOR ADDITIONAL INFORMATION ON SPECIFIC ITEMS, SEE STANDARD DRAWINGS.

DRAWN BY DHR	Layton City	STANDARD DRAWING
SCALE NONE		TYP–STR
DATE 3/96		ST–ST–03
REVISIONS 5/12		

STREET SECTION

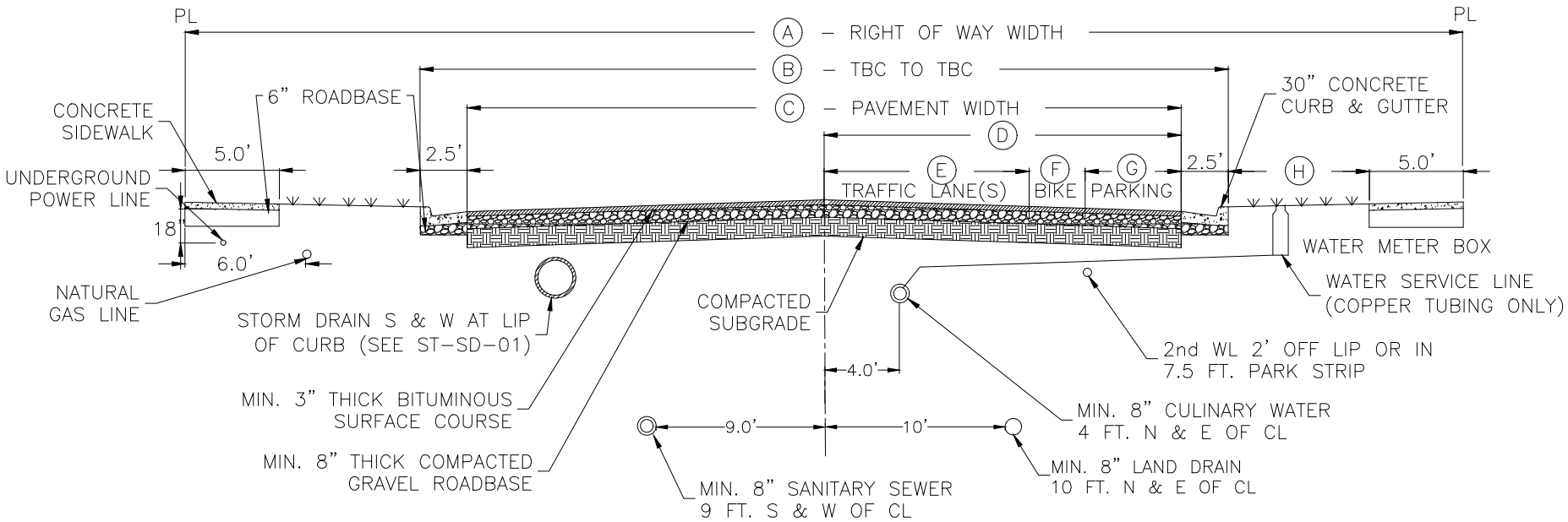

* ONLY ALLOWED IN CUL-DE-SACS OR LOOP STREETS SERVING TEN OR FEWER LOTS OR SENSITIVE LANDS AREA

** ARTERIAL STREETS SHALL HAVE:
4 – 12 FT. WIDE TRAFFIC LANES
2 – 8 FT. WIDE PARKING LANES
1 – 12 FT. WIDE MEDIAN STRIP

*** HILLSIDE RESIDENTIAL STREET – AS APPROVED BY CITY ENGINEER

**** PARK STRIP/SIDEWALK/ROW REQUIREMENTS AS APPROVED BY CITY ENGINEER

STREET DIMENSIONS

STREET TYPE	A	B	C	D	E	F	G	H
**ARTERIAL	110'	91'	86'	43'	30.0'	5.0'	8.0'	4.5'
MINOR ARTERIAL	82'	63'	58'	29'	17.0'	5.0'	7.0'	4.5'
COLLECTOR	73'	54'	49'	24.5'	13.5'	5.0'	6.0'	4.5'
MINOR COLLECTOR	67'	48'	43'	21.5'	10.5'	5.0'	6.0'	4.5'

NOTE:
UNLESS APPROVED OTHERWISE, MIN. DEPTH OF COVER OVER BURIED UTILITY LINES SHALL BE:

WATER MAIN	4.0 FT.
WATER SERVICE LINE	4.0 FT.
SEWER MAIN	5.0 FT.
STORM DRAIN	2.0 FT.
LAND DRAIN	4.5 FT.

TYPICAL SUBDIVISION	A	B	C	D	E	F	G	H
RESIDENTIAL COLLECTOR	62'	37'	32'	16'	10'	0'	6'	7.5'
RESIDENTIAL	58'	33'	28'	14'	10'	0'	4'	7.5'
*MINOR STREET	50'	33'	28'	14'	14'	0	–	4.5'
***6.0 ABUTTING WALK	39'	33'	28'	14'	10'	0'	4'	–
****PRIVATE STREET	–	33'	28'	14'	10'	0'	4'	–

← 4.0' WALK

DRAWN BY DHR	Layton City	STANDARD DRAWING STR-XSEC
SCALE NONE		
DATE 06/10		ST-ST-04
REVISIONS 03/12		

SUBDIVISION STREET CROSS SECTIONS

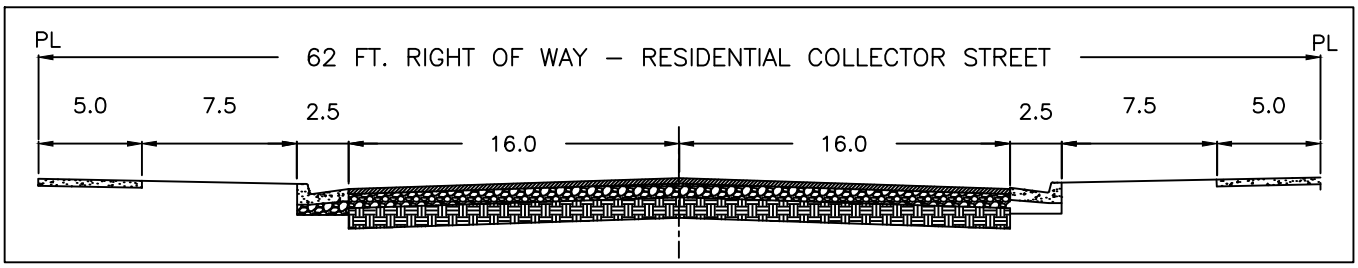

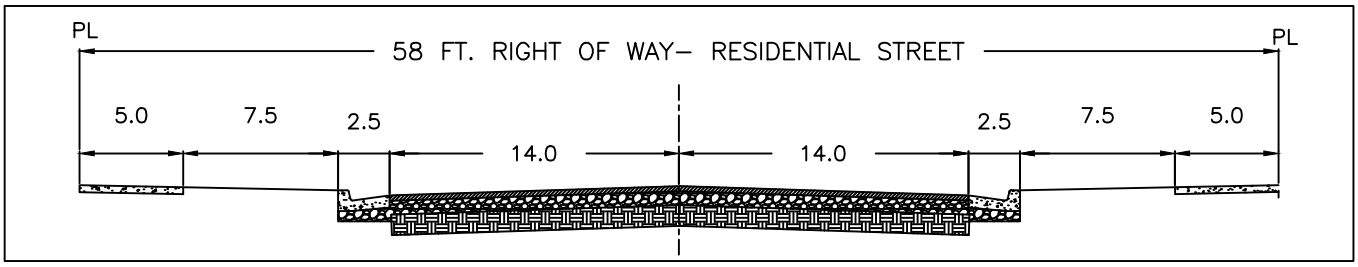

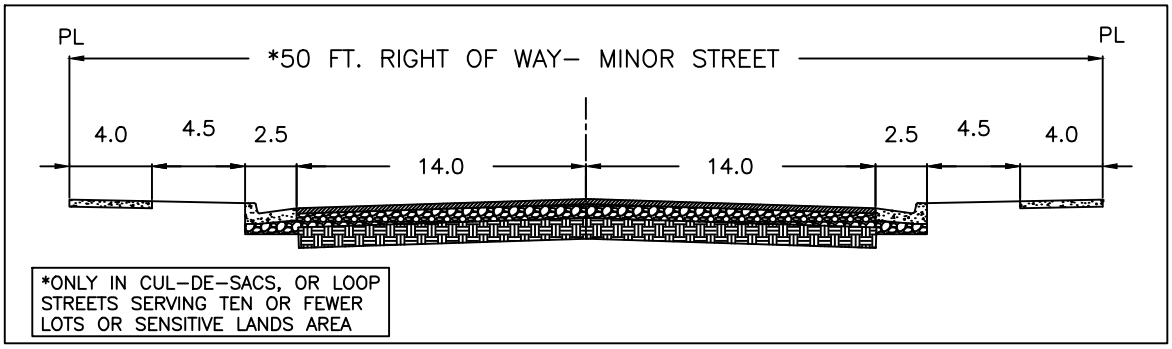

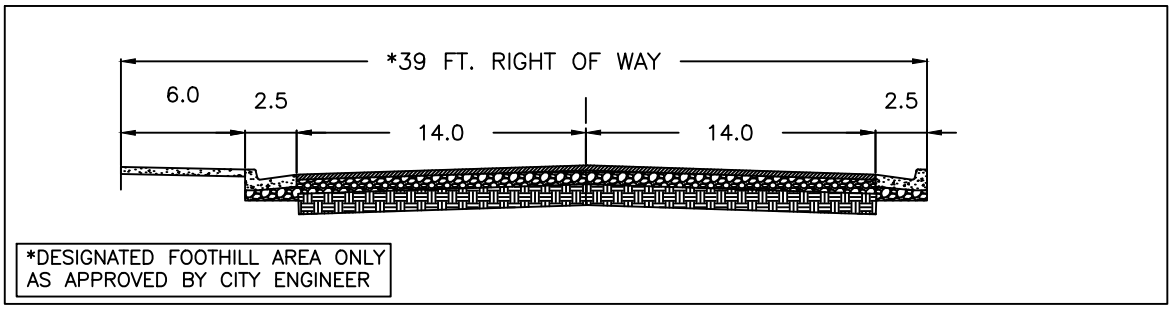

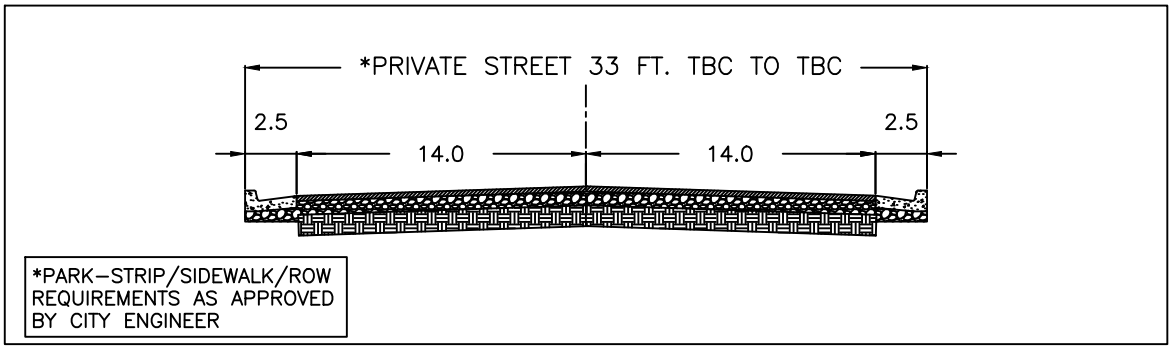

DRAWN BY DHR	Layton City	STANDARD DRAWING
SCALE NONE		SUB ST XSECTION
DATE 6/09		ST–ST–05
REVISIONS		

DRIVE APPROACH

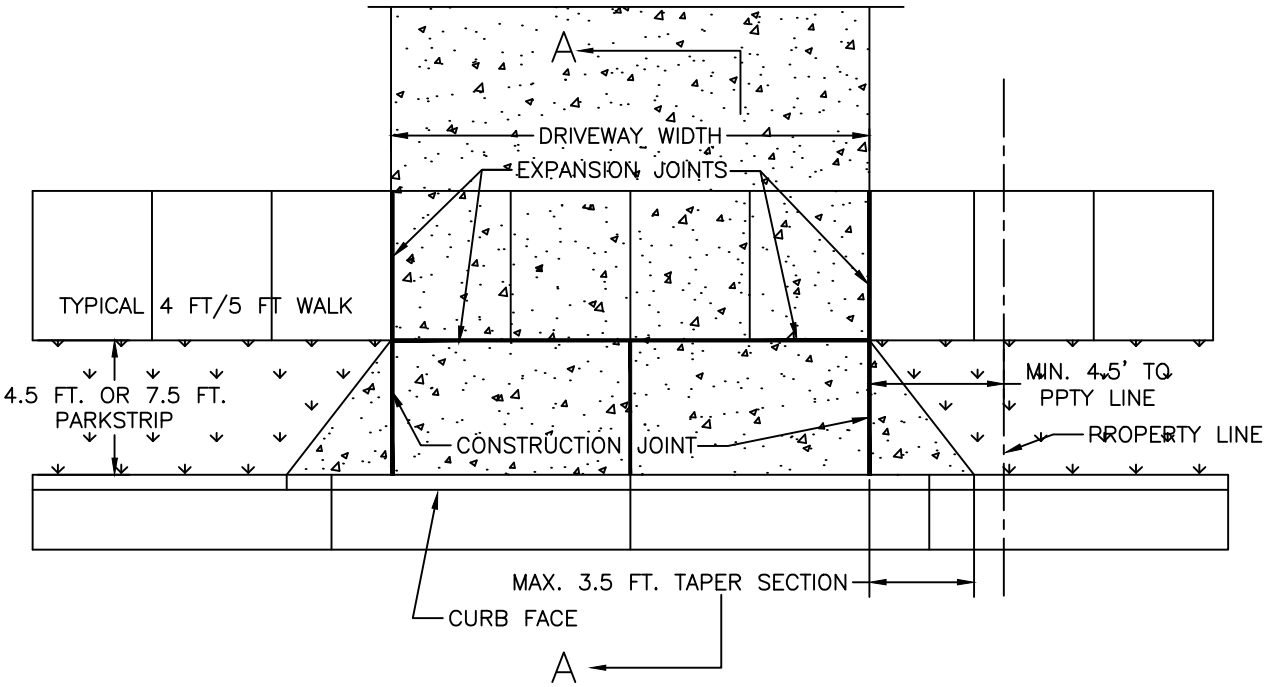

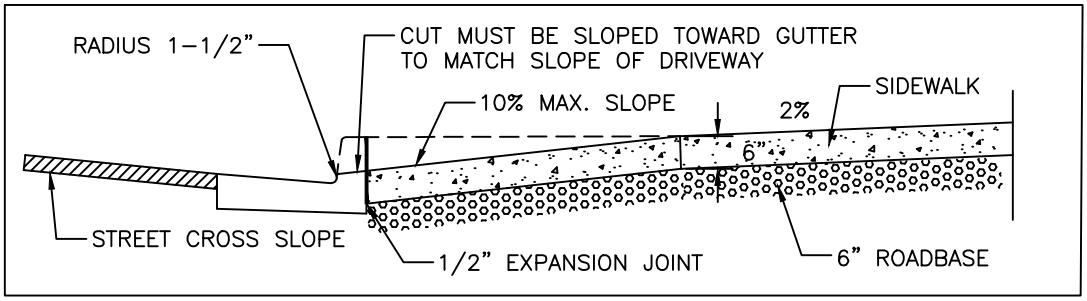

SECTION A–A

TABLE OF DRIVEWAY WIDTHS			% OF FRONTAGE ALLOWED IN APPROACH
ZONE	MINIMUM WIDTH(FT)	MAXIMUM WIDTH(FT)	
A	10	40	40
R–S	10	33	33
R–1–6	10	32	33
R–1–8	10	32	33
R–1–10	10	32	33
R–MH	10	32	33
R–2	10	32	33
RM–1	10	32	33
RM–2	10	32	33
R–H	10	32	33

THE DRIVE PAVEMENT SHALL BE CONSTRUCTED AS FOLLOWS:

WIDTH AT WALK	PAVEMENT SECTION
10.0' TO 12.0'	NO SPLIT REQUIRED
13.0' TO 20.0'	2 EQUAL WIDTH SECTIONS
21.0' TO 28.0'	3 EQUAL WIDTH SECTIONS
29.0' TO 40.0'	4 EQUAL WIDTH SECTIONS

THERE SHALL BE EXPANSION JOINT MATERIAL BETWEEN EACH SECTION

DRAWN BY DHR	Layton City	STANDARD DRAWING
SCALE NONE		TYP–DRIVE
DATE 4/01		ST–ST–06
REVISIONS		

DRIVE APPROACH AT EXISTING CURB & GUTTER

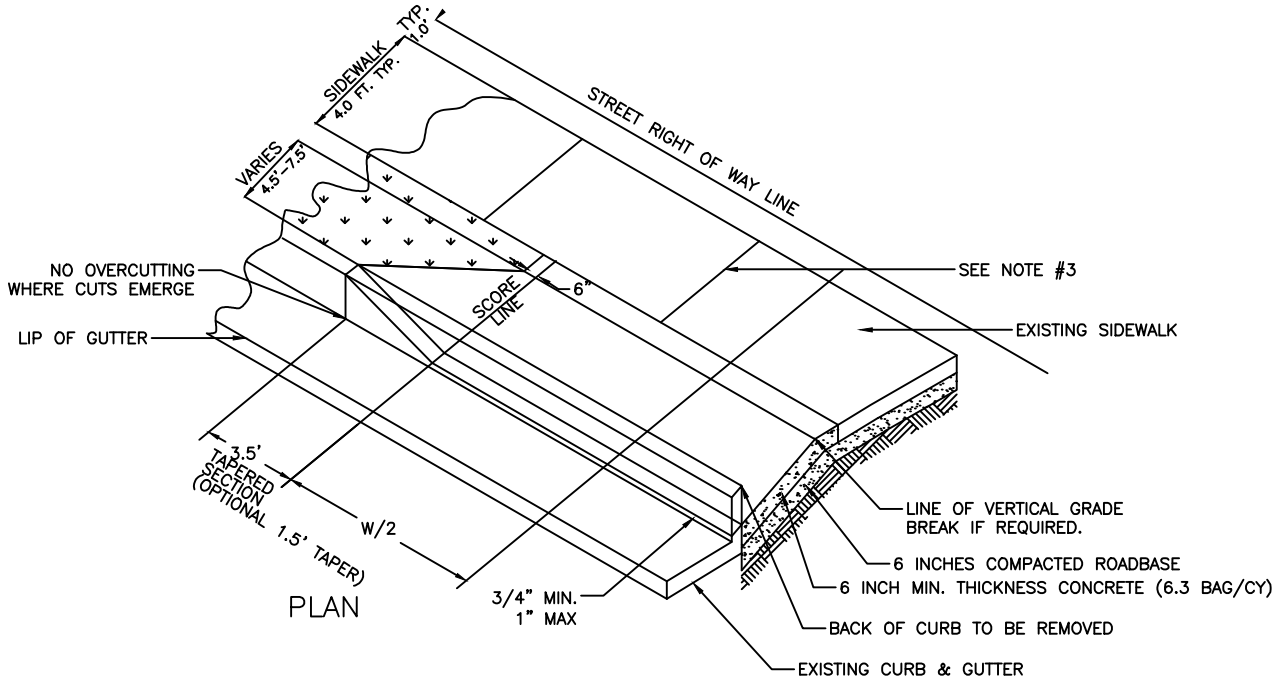

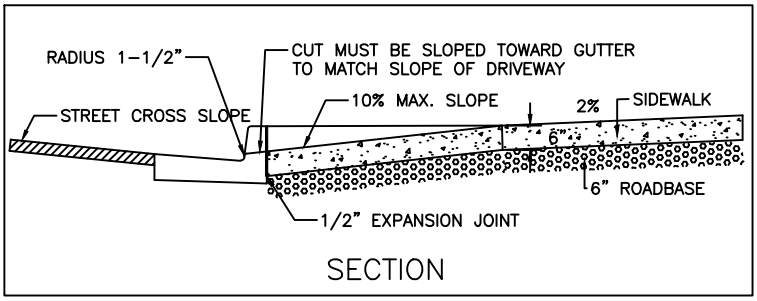

TABLE OF DRIVEWAY WIDTHS			% OF FRONTAGE ALLOWED IN APPROACH
ZONE	MINIMUM WIDTH(FT)	MAXIMUM WIDTH(FT)	
A	10	40	40
R-S	10	32	33
R-1-6	10	32	33
R-1-8	10	32	33
R-1-10	10	32	33
R-MH	10	32	33
R-2	10	32	33
RM-1	10	32	33
RM-2	10	32	33
R-H	10	32	33

NOTES

1. THE CONTRACTOR IS REQUIRED TO HAVE A CITY PERMIT.
2. HORIZONTAL CUT TO BE WIDTH OF DRIVEWAY PLUS FLARES ON EACH SIDE.
3. SIDEWALK SECTION MUST BE 6" MINIMUM THICKNESS (PLACED ON 6 INCHES OF COMPACTED ROADBASE) THROUGH WIDTH OF DRIVEWAY OR BE REPLACED WITH 6" CONCRETE TO NEAREST JOINT BEYOND WIDTH OF DRIVEWAY.
4. REMOVE AND REPLACE ALL DETERIORATED, WEAK, OR UNSOUND CONCRETE.
5. DIFFERENCE IN SLOPE OF DRIVEWAY RAMP AND THE SLOPE OF A LINE BETWEEN THE GUTTER AND A POINT ON THE ROADWAY 5' FROM THE FRONT EDGE OF THE GUTTER SHALL NOT EXCEED 15%. REDUCE DRIVEWAY RAMP SLOPE, NOT GUTTER SLOPE, WHERE REQUIRED. BREAKOVER ANGLE AT BACK OF APPROACH SHALL NOT EXCEED 6% MAXIMUM.
6. CONCRETE SHALL BE CLASS 4,000 PER APWA 03 30 04.
7. THE MINIMUM DISTANCE FROM THE PROPERTY LINE TO THE DRIVEWAY (MEASURED AT THE FRONT OF THE WALK) IS 4.5 FEET.
8. CURE CONCRETE WITH TYPE II (WHITE PIGMENTED) COMPOUND PER APWA 03 39 00.

DRAWN BY DHR	Layton City	STANDARD DRAWING
SCALE NONE		DR-APPR
DATE 3/96		ST-ST-07
REVISIONS 4/01		

ASPHALT REPLACEMENT

A PERMIT AND INSPECTION ARE REQUIRED FOR CURB AND GUTTER OR DRIVE APPROACH REPLACEMENT. CALL PUBLIC WORKS AT 801-336-3700 TO SET UP INSPECTION. MINIMUM OF 24 HOURS NOTICE IS REQUIRED.

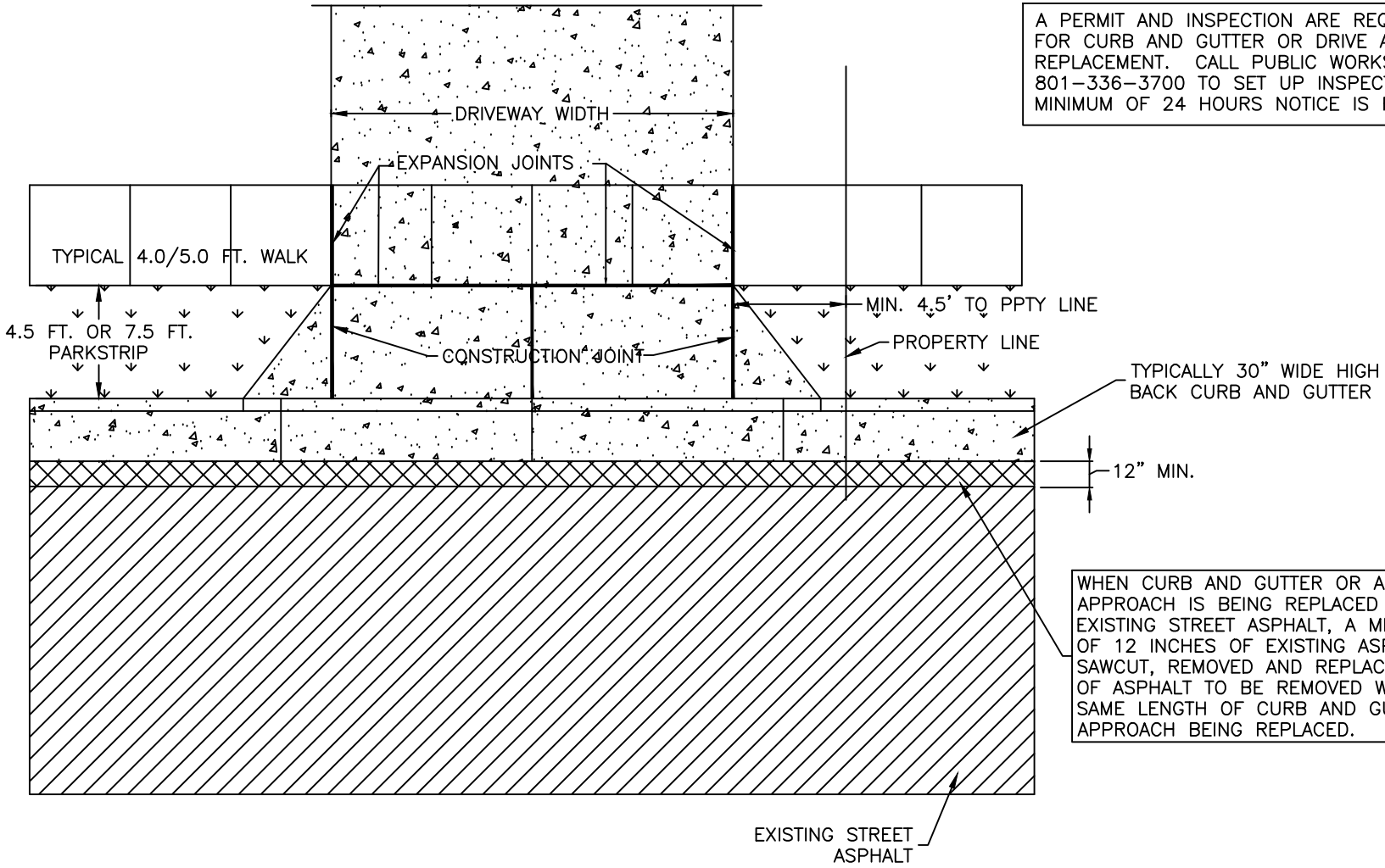

WHEN CURB AND GUTTER OR A DRIVE APPROACH IS BEING REPLACED ADJACENT TO EXISTING STREET ASPHALT, A MINIMUM WIDTH OF 12 INCHES OF EXISTING ASPHALT, MUST BE SAWCUT, REMOVED AND REPLACED. THE LENGTH OF ASPHALT TO BE REMOVED WILL BE THE SAME LENGTH OF CURB AND GUTTER OR DRIVE APPROACH BEING REPLACED.

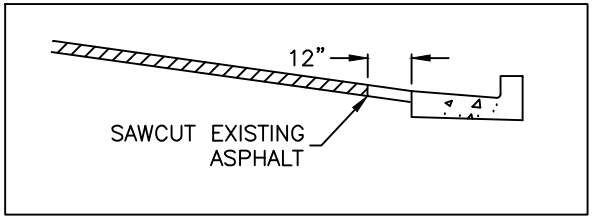

DRAWN BY DHR	Layton City	STANDARD DRAWING ASPH-RPLCMNT
SCALE NONE		
DATE 9/01		ST-ST-08
REVISIONS 1/04		

CURB & GUTTER & WATERWAY

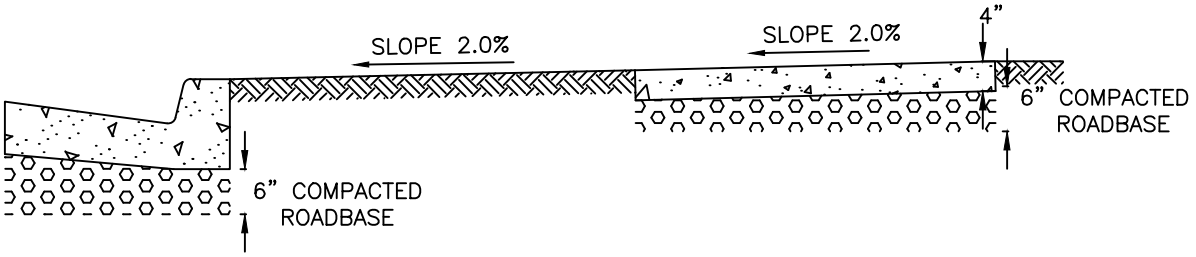

TYPICAL SECTION – STANDARD 30 INCH HIGH BACK CONCRETE CURB AND GUTTER – 4.5 FT. OR 7.0 FT. PARKSTRIP – 4.0 FT. WIDE WALK

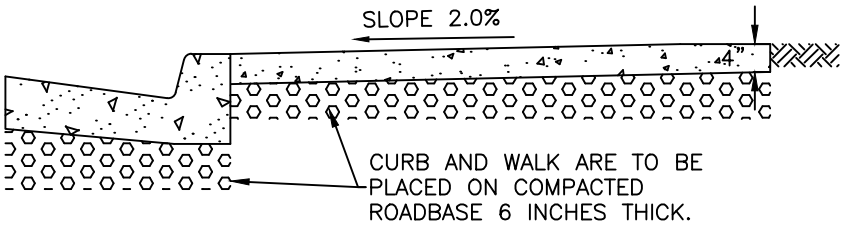

TYPICAL SECTION – STANDARD 30 INCH HIGH BACK CONCRETE CURB AND GUTTER – 6.0 FT. WIDE ABUTTING WALK.

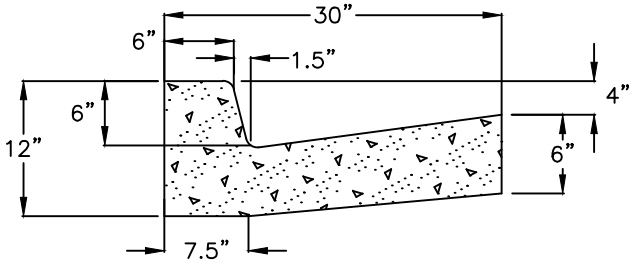

NOTE: PLACE MASTIC EXPANSION JOINTS @ 40 FT. AND CONSTRUCTION JOINTS @ 10 FT.

TYPICAL SECTION 30" CONCRETE CURB & GUTTER

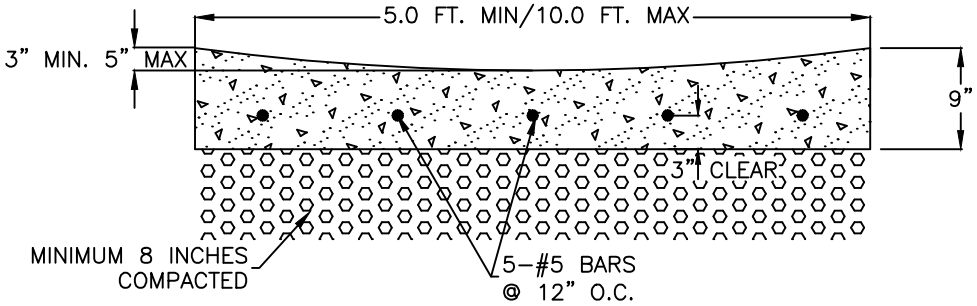

TYPICAL WATERWAY SECTION

CONCRETE SHALL BE 6.3 BAG MIX MINIMUM 4000 PSI.

DRAWN BY DHR	Layton City	STANDARD DRAWING ST–CG–WW
SCALE NONE		
DATE 3/96		ST–ST–09
REVISIONS 6/08		

CONCRETE SIDEWALK

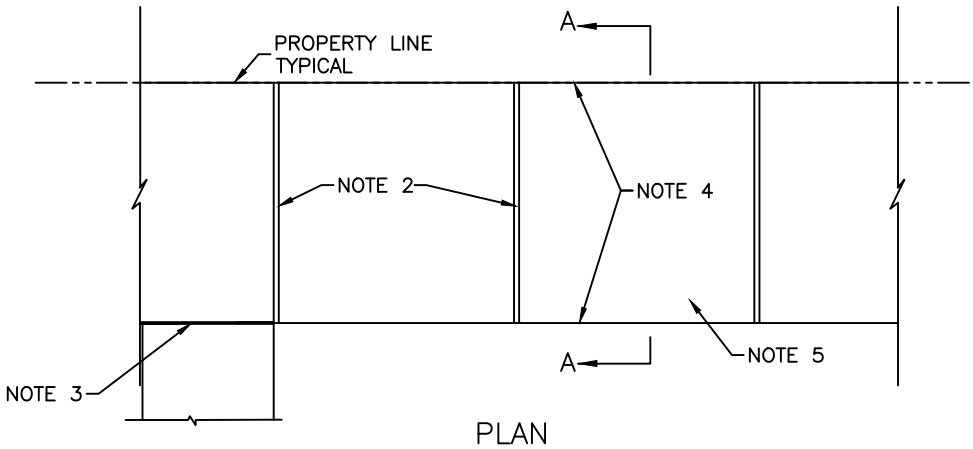

PLAN

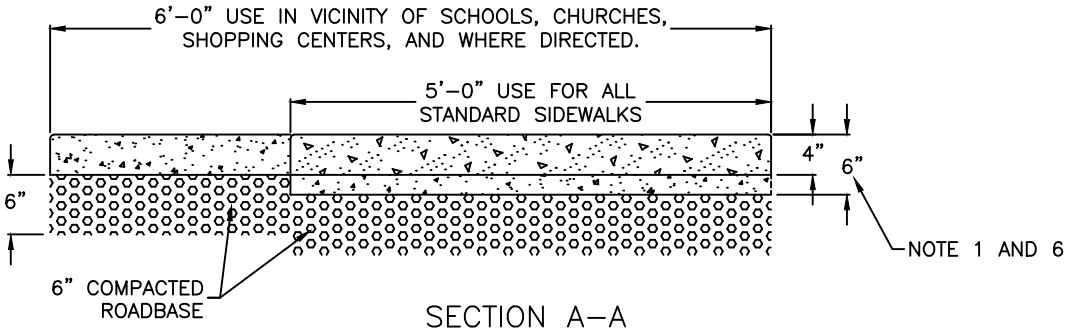

SECTION A–A

NOTE: PLACE MASTIC EXPANSION JOINTS @ 40 FT. AND CONSTRUCTION JOINTS @4 40 FT. (ALTERNATE) AND CONTROL JOINT @4 FT.

NOTES:

1. USE MONOLITHIC CONSTRUCTION 4" THICK EXCEPT AT DRIVEWAYS WHERE THICKNESS OF 6" IN RESIDENTIAL ZONE AND 8" IN COMMERCIAL AND INDUSTRIAL ZONE AREA IS REQUIRED.

2. PLACE CONTROL JOINTS AT INTERVALS EQUAL TO 1 TO 1 1/2 TIMES THE WIDTH OF THE SIDEWALK UNIFORMLY PLACED ALONG LENGTH OF SIDEWALK. CONTROL JOINT 3/4 INCH DEEP.

3. USE 1/2" EXPANSION JOINT FILLER AT INTERSECTIONS WITH PERPENDICULAR SIDEWALKS OR DRIVEWAYS AND WHERE SIDEWALK MEETS TOP BACK OF CURB.

4. EDGE SIDEWALK WITH 1/2" RADIUS EDGING TOOL. ROUND EDGES AT EXPANSION JOINTS TO A RADIUS OF 1/2".

5. USE FINE HAIR–BROOM TO FINISH WALKS ON GRADES UNDER 6% OVER 6% GRADE USE ROUGH HAIR–BROOM.

6. USE SIX INCHES OF COMPACTED ROADBASE UNDER SIDEWALK, CURB AND GUTTER AND DRIVE APPROACHES.

7. CURE CONCRETE WITH TYPE II (WHITE PIGMENTED) COMPOUND PER APWA 03 39 00.

DRAWN BY DHR	Layton City	STANDARD DRAWING
SCALE NONE		WALK–DET
DATE 10/93		ST–ST–10
REVISIONS 4/01		

HANDICAP RAMPS

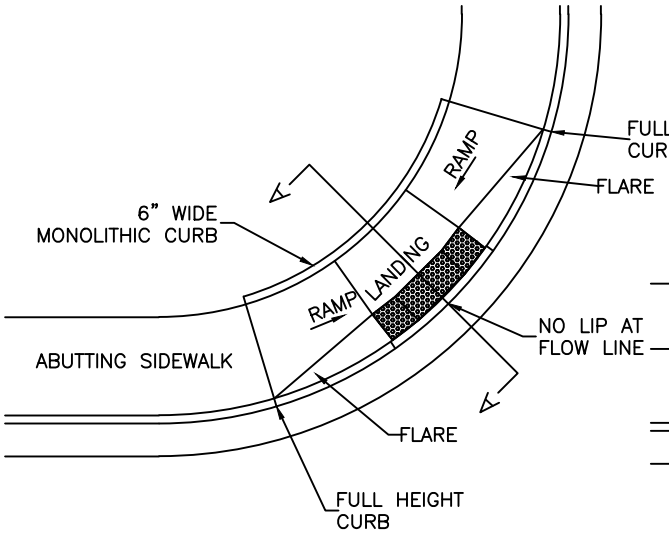

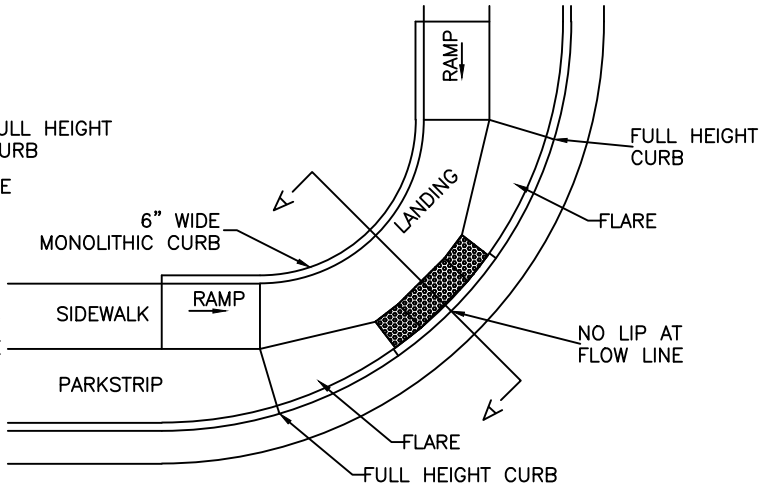

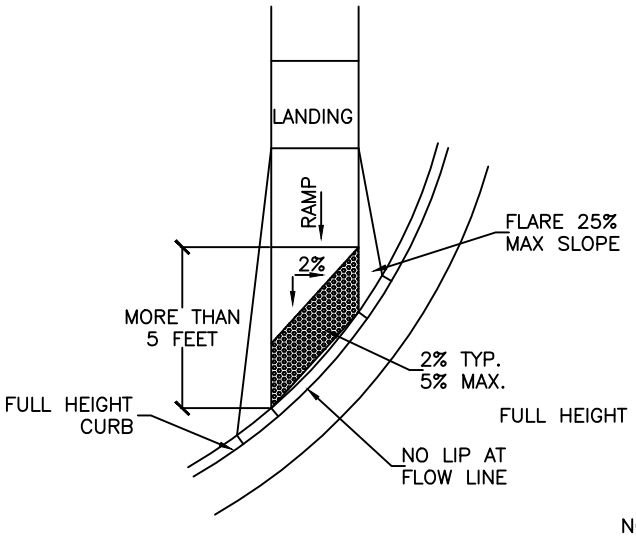

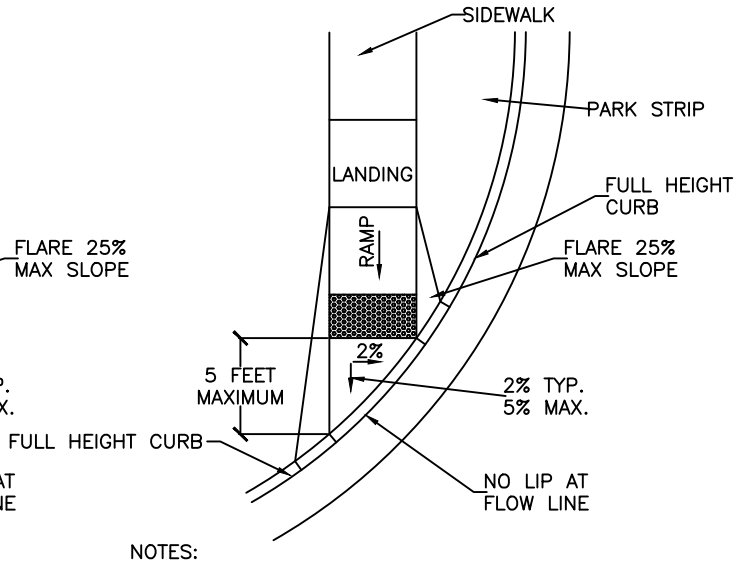

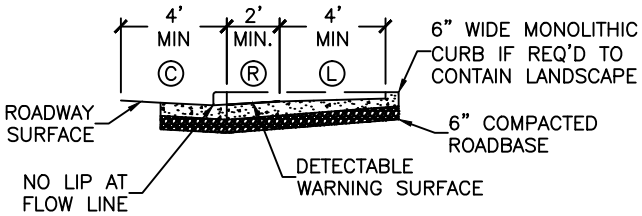

SECTION A–A

SLOPE TABLE			
	ITEM	MAX. RUNNING SLOPE*	MAX. CROSS SLOPE*
Ⓛ	LANDING	2% (1V:48H)	2% (1V:48H)
Ⓡ	RAMP	8.33% (1V:12H)	2% (1V:48H)
Ⓒ	CLEAR SPACE	5% (1V:20H)	2% *1V:48H)
	SIDEWALK		2% *1V:48H)
	FLARE	10% (1V:10H)	

NOTES:

1. SITE CONDITIONS WILL VARY. CONFIGURATION OF RAMP, LANDING, AND TRANSITION MAY BE CHANGED, BUT THEY MUST MEET DIMENSIONS AND SLOPE SHOWN ON PLAN. THE USE OF FLARES, CURBWALLS. ETC. ARE AT THE DISCRETION OF THE ENGINEER.

2. 4' X 4' MINIMUM LANDING WITH MAXIMUM 2% RUNNING AND CROSS SLOPE. BLENDED RAMPS (5% MAX. SLOPE) DO NOT REQUIRE LANDING.

3. RAMPS 8.33% (1:12) MAXIMUM RUNNING SLOPE.

4. THE WARNING SURFACE SHALL EXTEND 24" MIN. IN THE DIRECTION OF PEDESTRIAN TRAVEL AND MUST OCCUPY THE FULL WIDTH OF CURB CUT.

5. LOCATE THE DETECTABLE WARNING SURFACE SO THE EDGE NEAREST THE STREET IS AT OR WITHIN 2" OF THE BACK OF CURB.

6. RAMP GRADE BREAK MUST BE PERPENDICULAR TO RUNNING SLOPE.

7. LOCATE CURB CUT WITHIN CROSSWALK.

8. WHEN DETECTABLE WARNING SURFACE IS CUT, GRIND OFF REMAINING PORTION OF ANY CUT DOMES. SEAL ALL CUT PANEL EDGES TO PREVENT WATER DAMAGE.

9. PROVIDE BRICK RED DETECTABLE WARNING SURFACE (SEE ST–ST–12).

DRAWN BY RB	Layton City	STANDARD DRAWING
SCALE NONE		ADA RAMP
DATE 1/12		ST–ST–11
REVISIONS		

DETECTABLE WARNING SURFACE PAVER UNIT

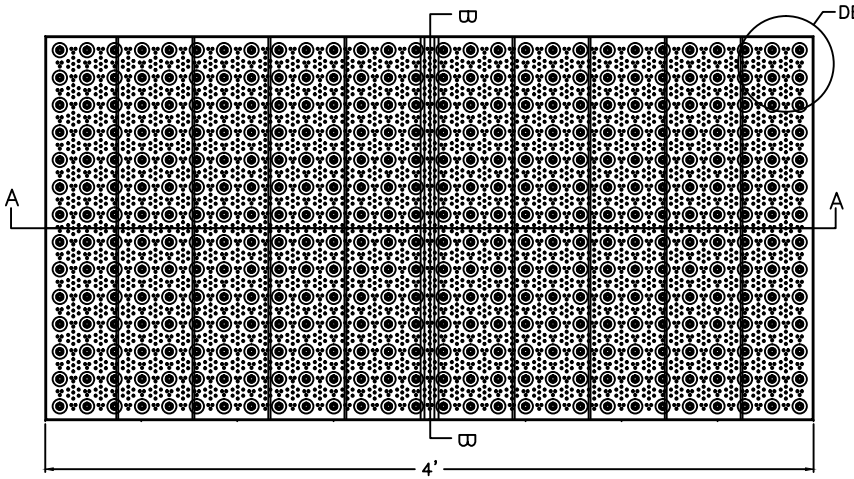

PAVER UNIT PLAN

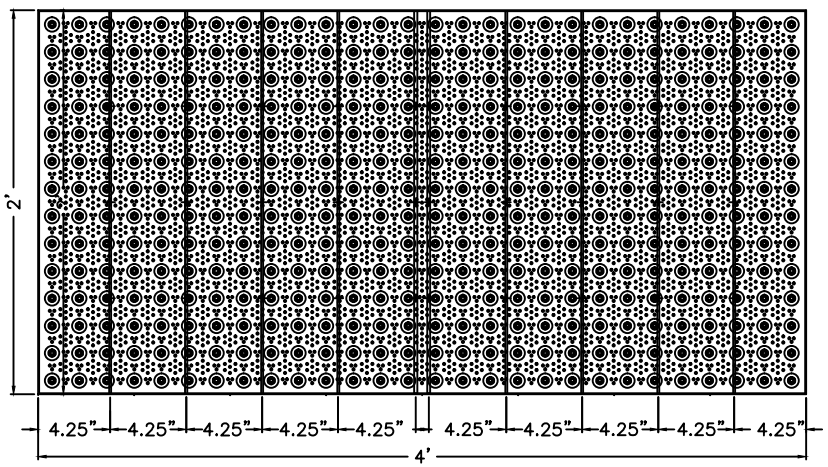

PAVER UNIT REFLECTED PLAN

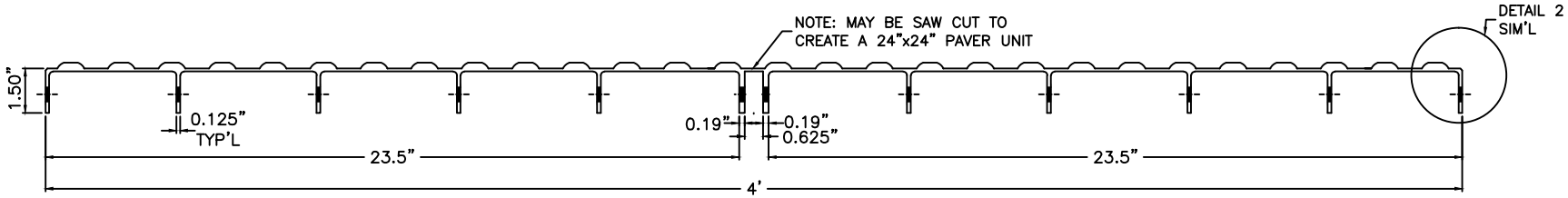

SECTION A

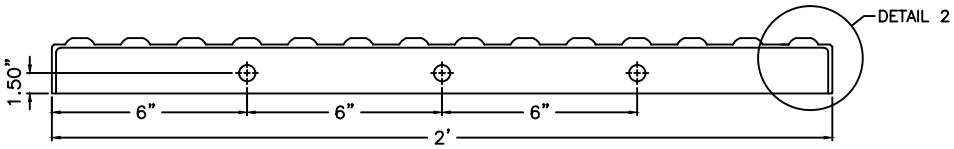

SECTION B

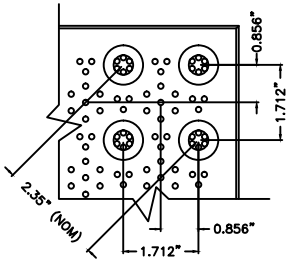

DETAIL 1

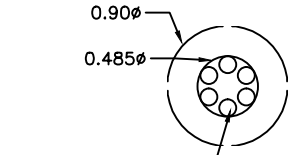

TRUNCATED DOME

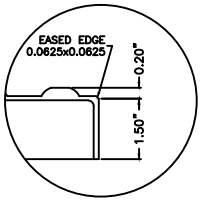

DETAIL 2

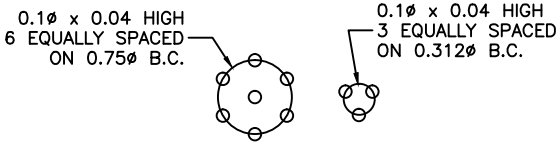

FIELD DOT PATTERNS

DRAWN BY DHR	Layton City	STANDARD DRAWING SURFACE PAVER
SCALE NONE		
DATE 2/05		ST–ST–12
REVISIONS		

MINIMUM MILL AND OVERLAY LIMITS FOR STREET EXCAVATION

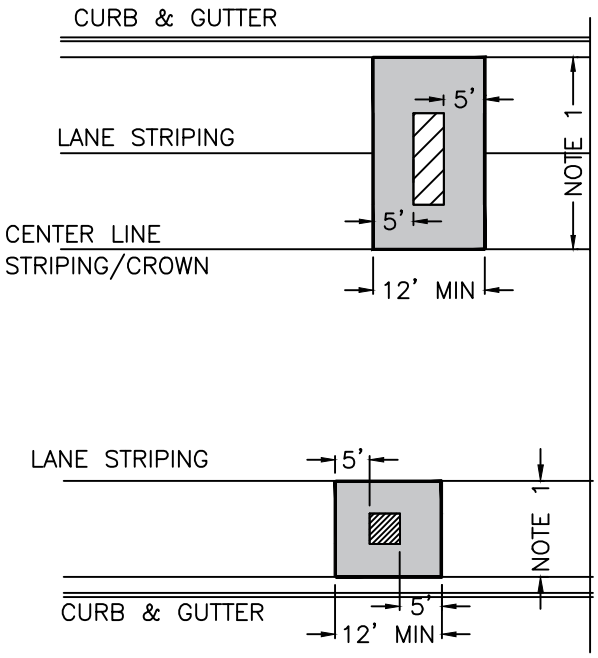

PERPENDICULAR TRENCHES

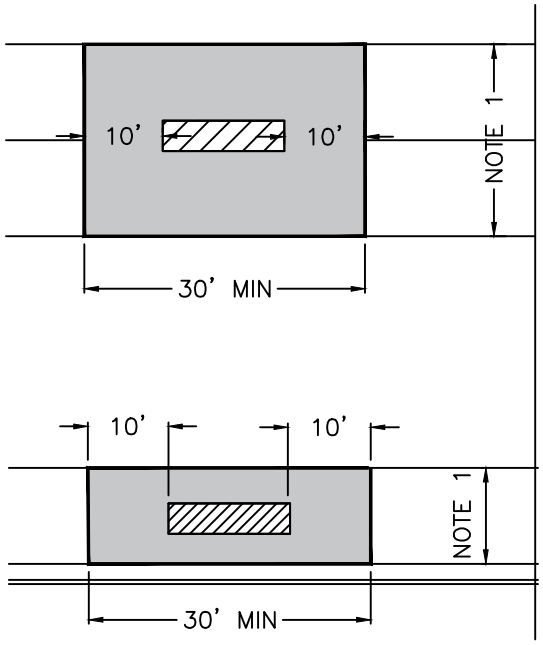

PARALLEL TRENCHES

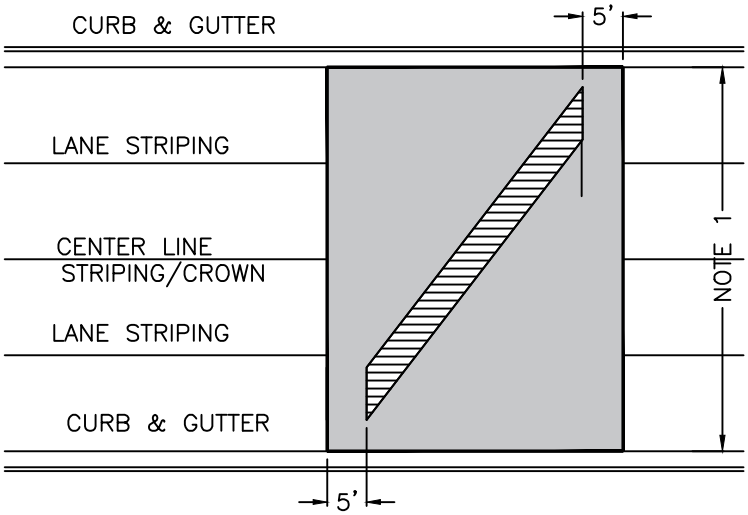

DIAGONAL TRENCHES

NOTES:

1. WIDTH OF MILL AND OVERLAY
   EXTEND 2-INCH MILL AND OVERLAY TO THE EDGE OF THE ADJACENT TRAVEL LANE. MINIMUM OF 10-FEET WIDE.

2. SURFACE LEVEL TOLERANCES
   3/8 INCH PARALLEL TO STREET CENTERLINE AND 1/4 INCH TRANSVERSE TO STREET CENTERLINE AS MEASURED WITH A 10 FOOT LONG STRAIGHT EDGE.

3. MULTIPLE TRENCHES
   MULTIPLE TRENCHES INTO THE STREET AN INDIVIDUAL STREET SYSTEM WILL REQUIRE A CONTIGUOUS MILL AND OVERLAY THAT ENCOMPASSES ALL TRENCHES.

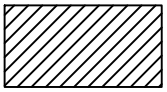

TRENCH REPAIR

OVERLAY LIMITS

DRAWN BY DHR	Layton City	STANDARD DRAWING
SCALE NONE		SEAL-LMT
DATE 7/95		ST-ST-13
REVISIONS		

STANDARD AND TEMPORARY CUL-DE-SAC

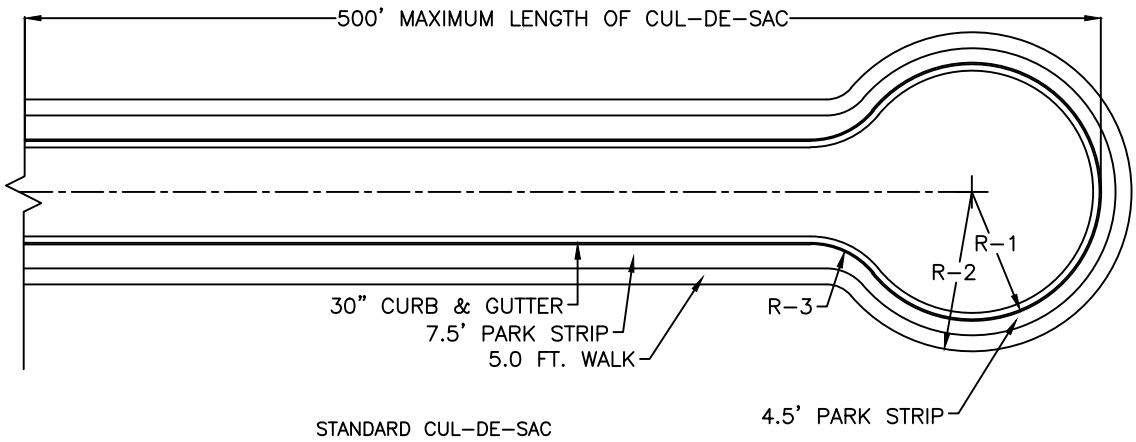

STANDARD CUL-DE-SAC

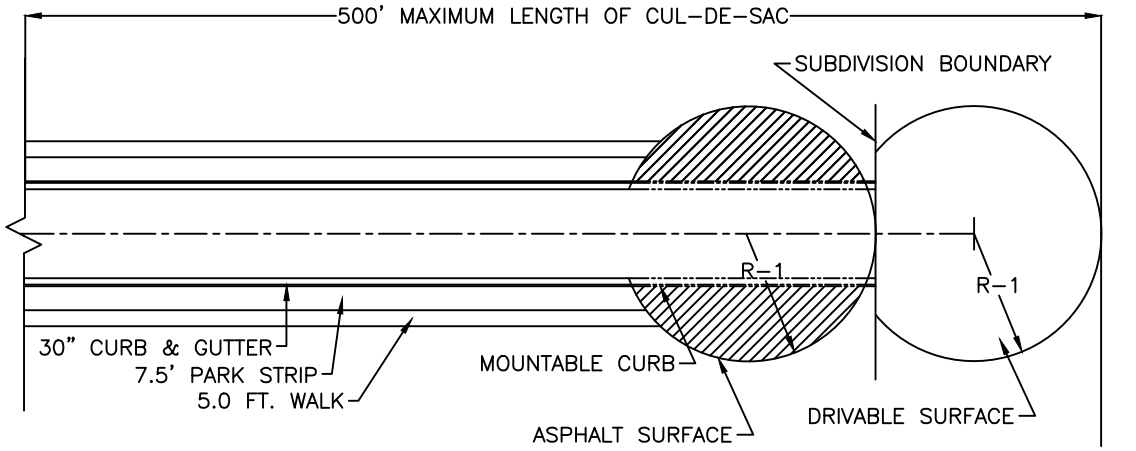

FIRE ACCESS ROAD FOR FUTURE DEVELOPMENT WITH ON-SITE AND OFF-SITE TEMPORARY TURN-AROUNDS

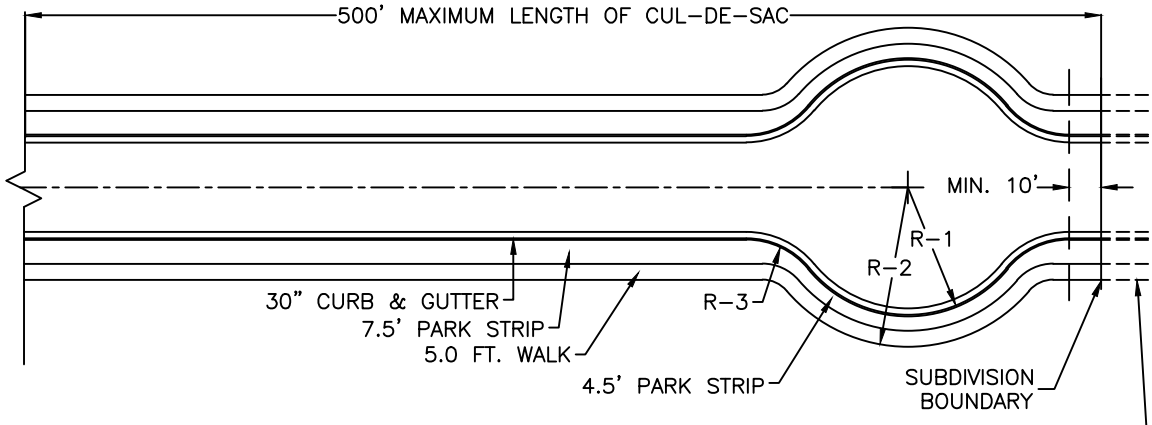

*ANY CUL-DE-SAC WITH FUTURE STREET TIE-IN MUST HAVE CITY ENGINEER AND FIRE MARSHALL APPROVAL PRIOR TO CONSTRUCTION.

DRAWN BY	DHR
SCALE	NONE
DATE	3/96
REVISIONS	4/10

Layton City

STANDARD DRAWING

CULDESAC

ST-ST-14

RADIUS (FT.)	
R-1 MINIMUM DRIVEABLE SURFACE	40
R-2 CENTER TO RIGHT-OF-WAY	50
R-3 BACK OF CURB RADIUS	25

DEAD END ACCESS WAY

ONLY ALLOWED IN SENSITIVE LAND AREA

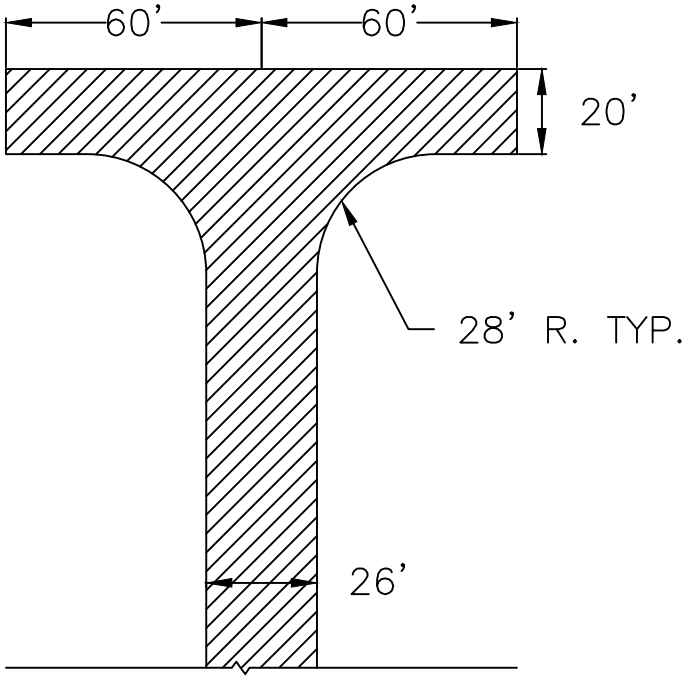

120' HAMMERHEAD

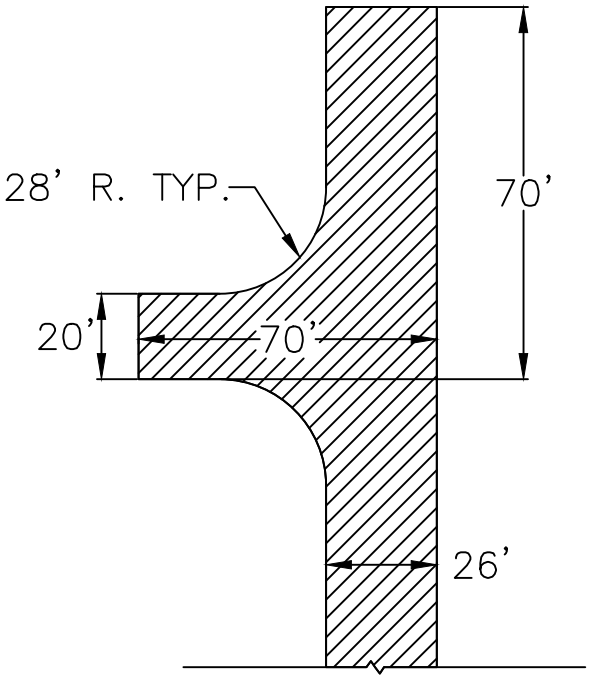

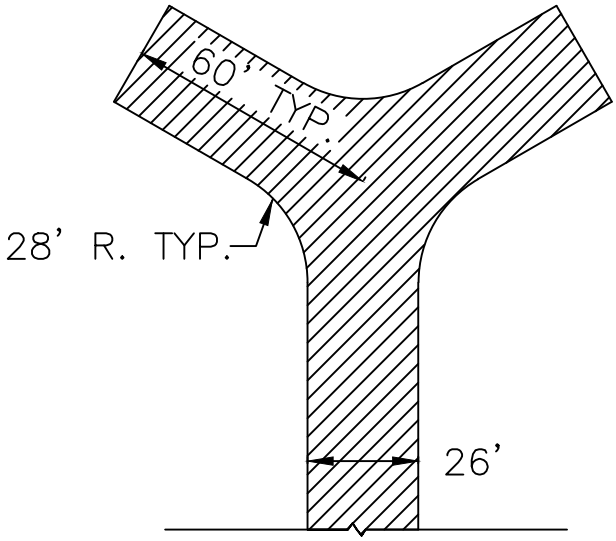

ALTERNATIVES TO 120' HAMMERHEAD

DRAWN BY DEAD-END	Layton City	STANDARD DRAWING DEAD-END
SCALE NONE		
DATE 11/93		
REVISIONS 11/14		ST-ST-15

MONUMENT CAP AND BASE

MONUMENT CAP
SURVEYED BY LAND SURVEYORS

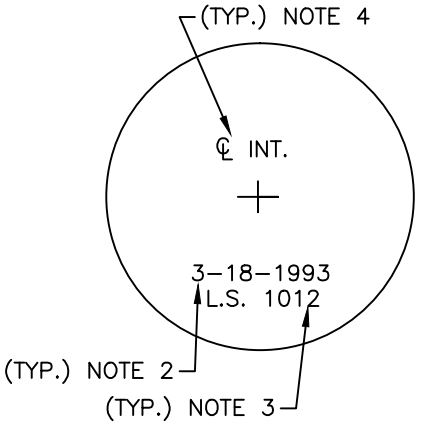

PLAN

CAST IN PLACE
MONUMENT BASE

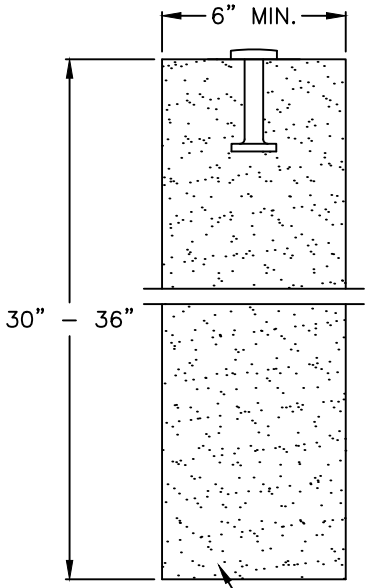

PRECAST
MONUMENT BASE

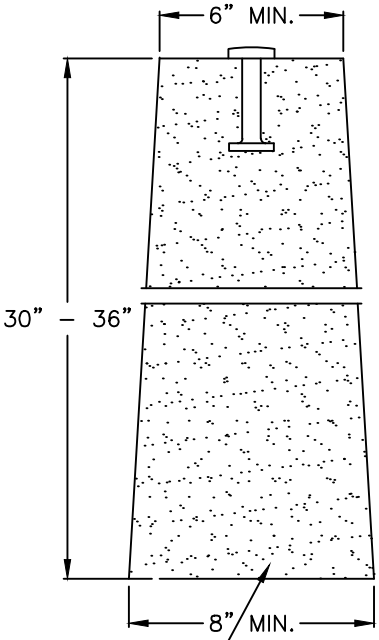

CONCRETE APAWA 03304
CLASS 4000

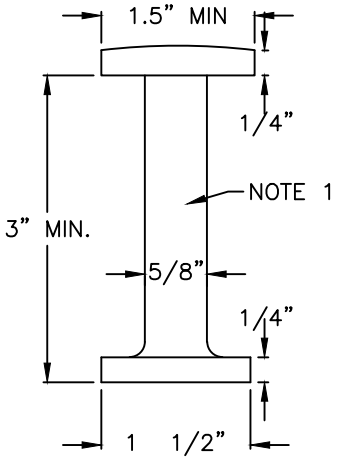

SECTION

NOTES:

1. USE MONUMENT CAP (PLATE) OF BRASS OR BRONZE.

2. SHOW MONTH, DAY, AND YEAR WHEN CAP IS INSTALLED.

3. SHOW LICENSE NUMBER OF LAND SURVEYOR WHO SET THE CAP.

4. SHOW THE TYPE OF MONUMENT ON THE CAP. THE FOLLOWING IS A LIST OF COMMONLY USE ABBREVIATIONS:

ML. INT.	: MONUMENT LINE INTERSECTION
INT.	: INTERSECTION LINE
℄ INT.	: CENTERLINE INTERSECTION
P.I.	: POINT OF INTERSECTION
P.C.	: POINT OF CURVATURE
P.T.	: POINT OF TANGENCY
P.O.C.	: POINT ON CURVE
P.R.C.	: POINT OF REVERSE CURVE
P.C.C.	: POINT OF COMPOUND CURVE
W.C.	: WITNESS CORNER
P.O.T.	: POINT ON TANGENT
S.C.	: SECTION CORNER

DRAWN BY DHR	Layton City	STANDARD DRAWING
SCALE NONE		MON-CAP
DATE 1/93		ST-ST-16
REVISIONS		

UTILITY LOCATION ON CURVED STREET
MINIMUM RADIUS 200'

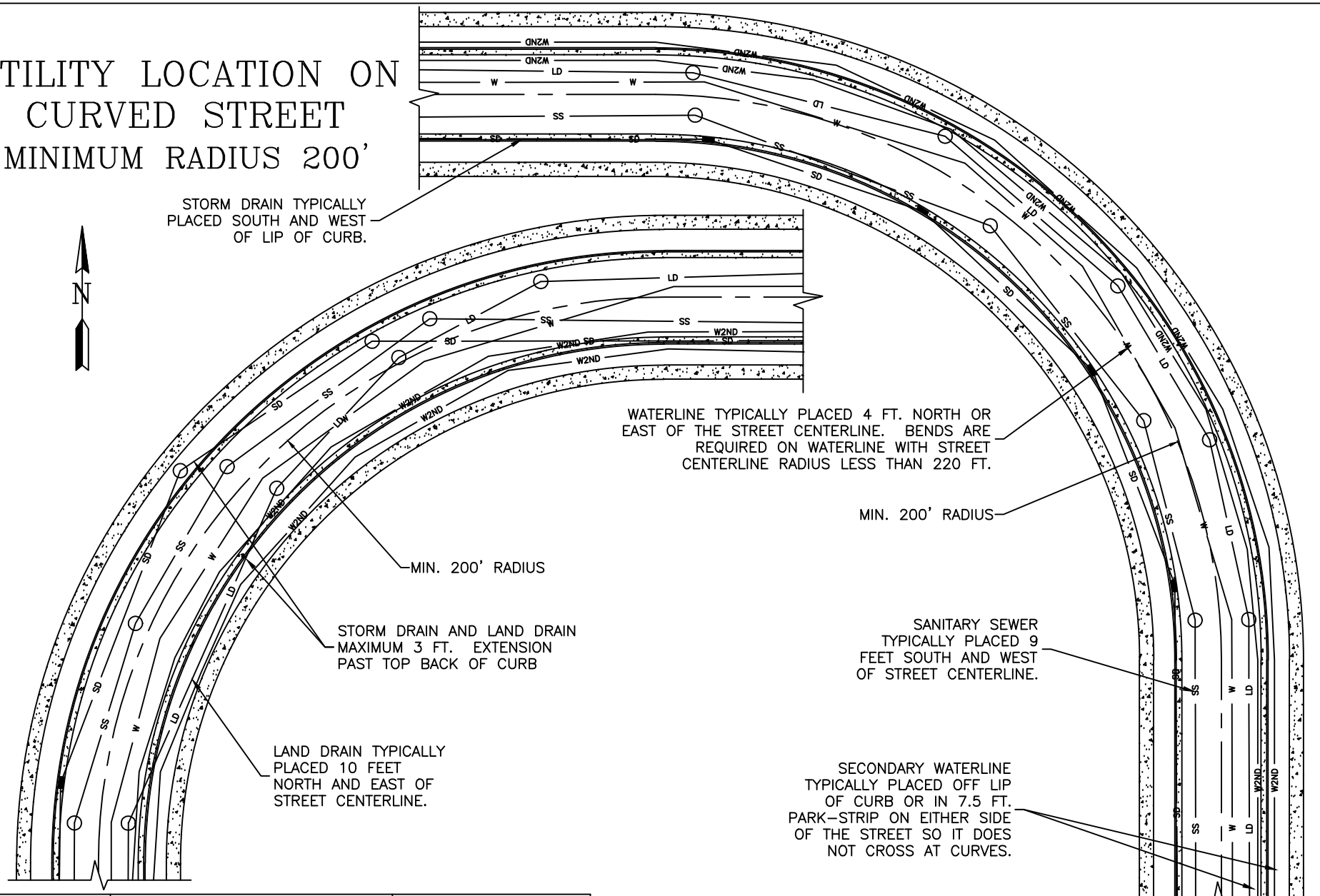

DRAWN BY DHR	Layton City	STANDARD DRAWING STR-UTIL
SCALE NONE		
DATE 5/12		ST-ST-17
REVISIONS		

CONCRETE GRADE RING ADJUSTMENT

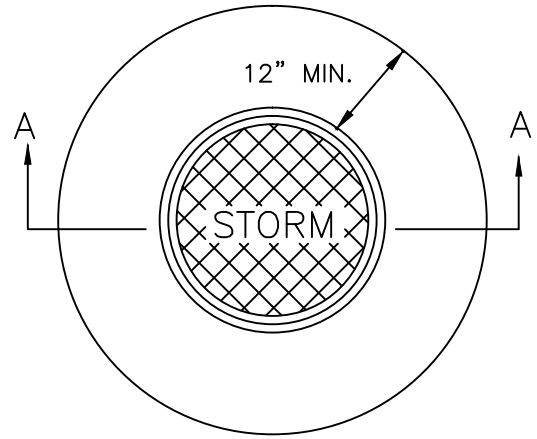

PLAN

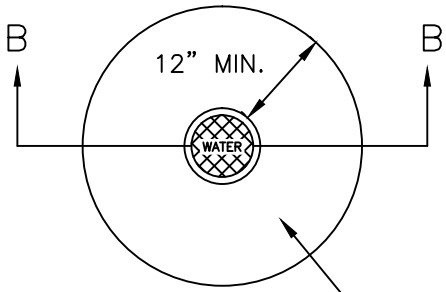

PLAN

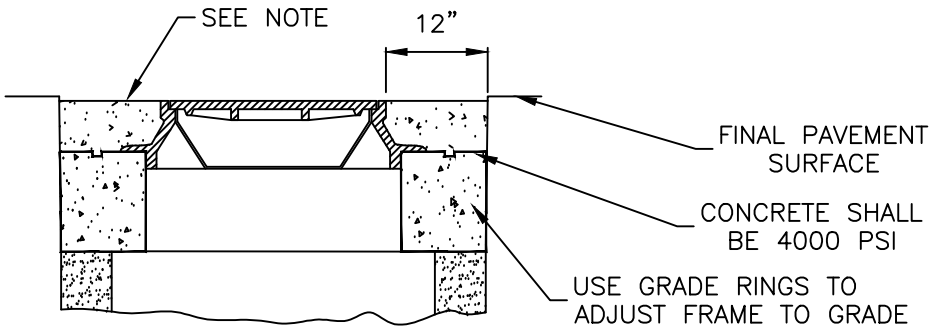

SECTION A

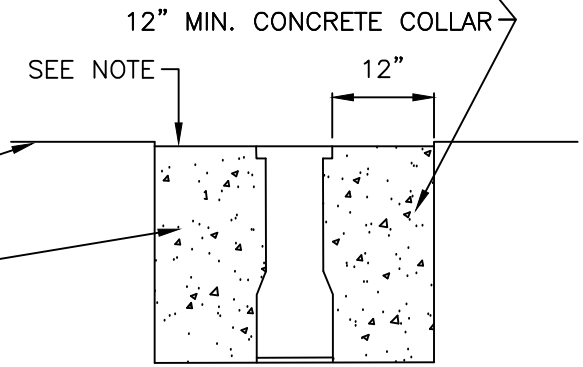

SECTION B

NOTE: FINISH GRADE TO BE 1/2" BELOW AND MATCH EXISTING SLOPE OF STREET PAVEMENT SURFACE.

DRAWN BY DHR	Layton City	STANDARD DRAWING GRADE–RING
SCALE NONE		
DATE 11/99		ST–ST–18
REVISIONS		

FIELD FENCE AND GATE

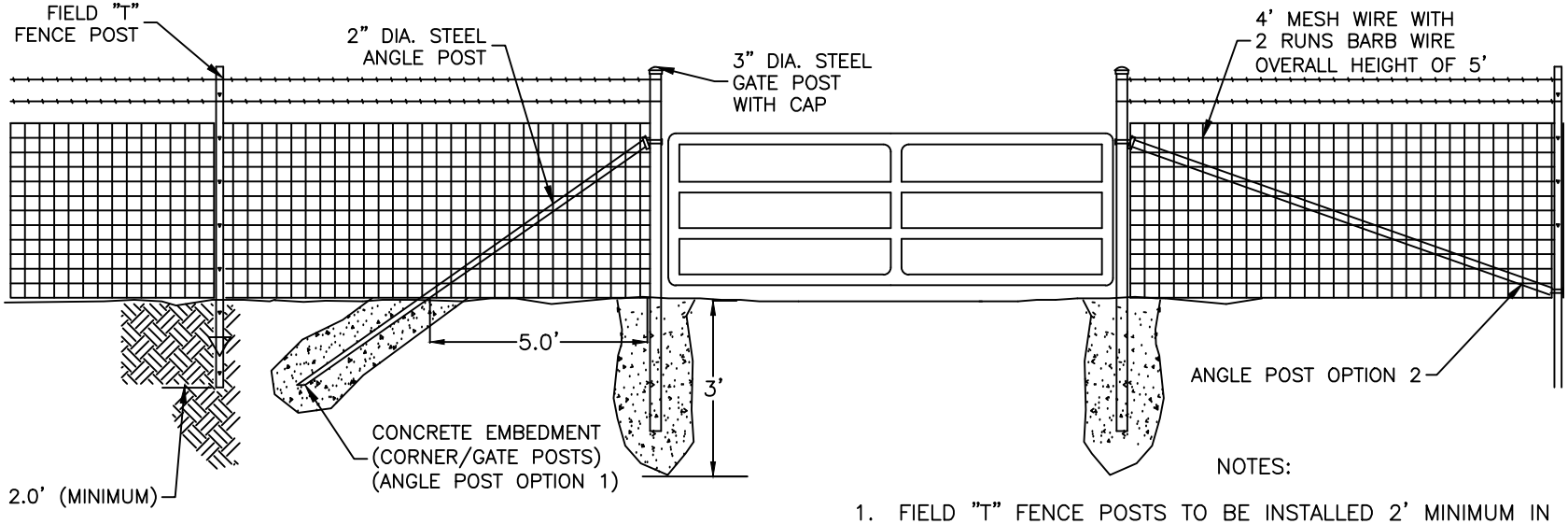

NOTES:

1. FIELD "T" FENCE POSTS TO BE INSTALLED 2' MINIMUM IN GROUND.
2. ALL CORNER AND GATE POST TO BE 3" DIAMETER SCHEDULE 40 STEEL POSTS EMBEDDED IN 3' ON CONCRETE WITH MIN 2" DIAMETER ANGLE POST.
3. MAXIMUM BRACE POST SPACING IS 400'.
4. FENCE TO BE CONNECTED TO FENCE POST WITH 10 GAUGE WIRE AT GROUND LEVEL, TOP OF FENCE POSTS, AND AT 1' SPACING BETWEEN (3 CONNECTIONS MINIMUM).
5. CONCRETE SHALL BE 6.0 BAG MIN. AND DESIGNED TO 4000 PSI ON A 28 DAY COMPRESSIVE TEST.
6. MAXIMUM FENCE POST SPACING IS 16 FEET WITH 2 – 36" STAYS (RED BRAND OR EQUAL) PER 16 FEET.
7. MESH TO BE 12 GAUGE GALVANIZED WIRE WITH 4"X4" SPACING (RED BRAND OR EQUAL).
8. BARB WIRE TO BE 50 DEFENDER WITH 2 RUNS WITH 6" SPACING (RED BRAND OR EQUAL).

DRAWN BY SH	Layton City	STANDARD DRAWING FIELD FENCE
SCALE NONE		
DATE 11/10		ST–ST–19
REVISIONS		

NON–CLIMBING FIELD FENCE AND GATE

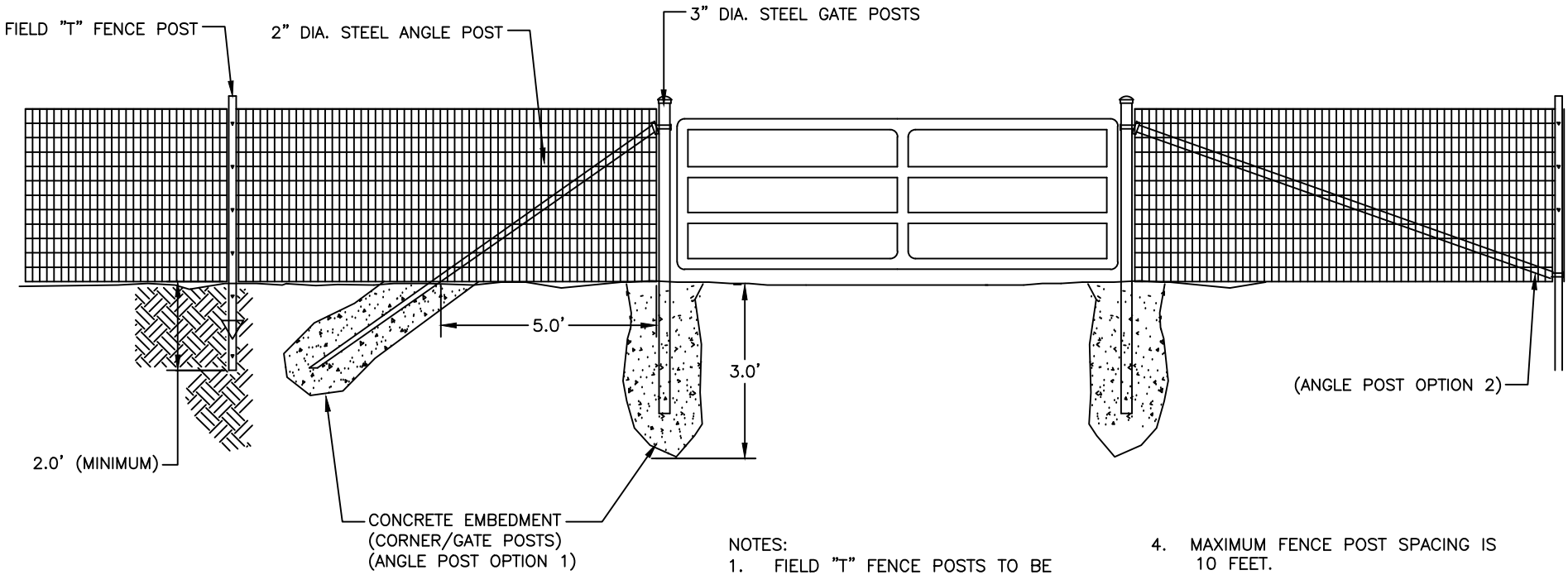

5.0 FT. HIGH NON–CLIMBING FENCE OR
4.0 FT. HIGH NON–CLIMBING FENCE
WITH ONE STRAND OF BARB WIRE

NOTES:

1. FIELD "T" FENCE POSTS TO BE INSTALLED 2' MINIMUM IN GROUND.
2. ALL CORNER AND GATE POST TO BE 3" DIAMETER SCHEDULE 40 STEEL POSTS EMBEDDED IN 3' OF CONCRETE WITH MIN 2" DIAMETER ANGLE POST.
3. FENCE TO BE CONNECTED TO FENCE POST WITH 10 GAUGE WIRE AT GROUND LEVEL, TOP OF FENCE POSTS, AND AT 1' SPACING BETWEEN (3 CONNECTIONS MINIMUM).
4. MAXIMUM FENCE POST SPACING IS 10 FEET.
5. CONCRETE SHALL BE 6.0 BAG MIN. AND DESIGNED TO 4000 PSI ON A 28 DAY COMPRESSIVE TEST.
6. MAXIMUM BRACE POST SPACING IS 400 FEET.

DRAWN BY DHR	Layton City	STANDARD DRAWING NO CLIMB FNC
SCALE NONE		
DATE 12/99		ST–ST–20
REVISIONS		

SHOULDER WORK WITH MINOR ENCROACHMENT

66-FOOT RIGHT OF WAY

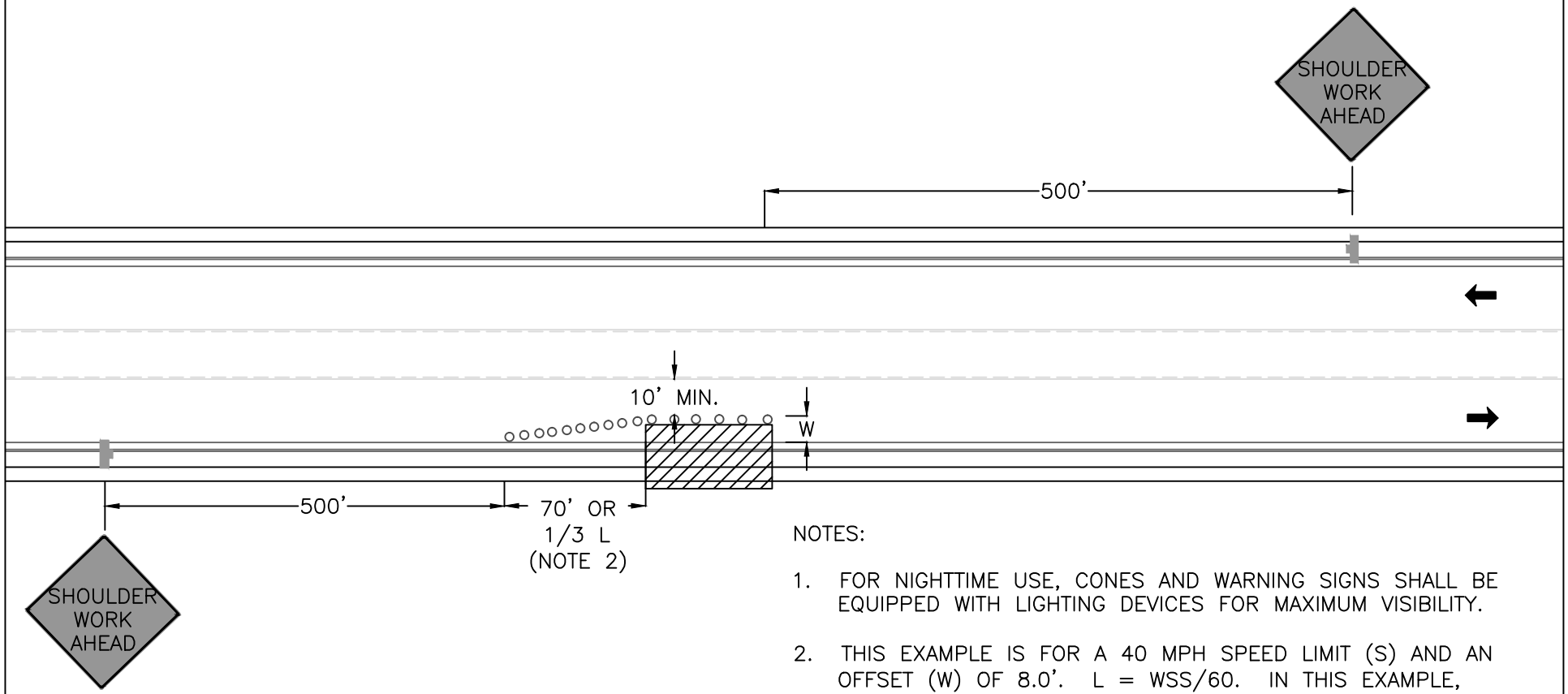

NOTES:

1. FOR NIGHTTIME USE, CONES AND WARNING SIGNS SHALL BE EQUIPPED WITH LIGHTING DEVICES FOR MAXIMUM VISIBILITY.

2. THIS EXAMPLE IS FOR A 40 MPH SPEED LIMIT (S) AND AN OFFSET (W) OF 8.0'. L = WSS/60. IN THIS EXAMPLE, L = (8x40x40)/60 = 213.3'. 1/3 L = 213.3/3 = 71 OR ROUND TO 70.0'.

DRAWN BY AM	Layton City	STANDARD DRAWING SLDR 66' ROW
SCALE NONE		
DATE 5/08		ST-ST-21
REVISIONS 3/12		

SHOULDER WORK WITH MINOR ENCROACHMENT
60–FOOT RIGHT OF WAY

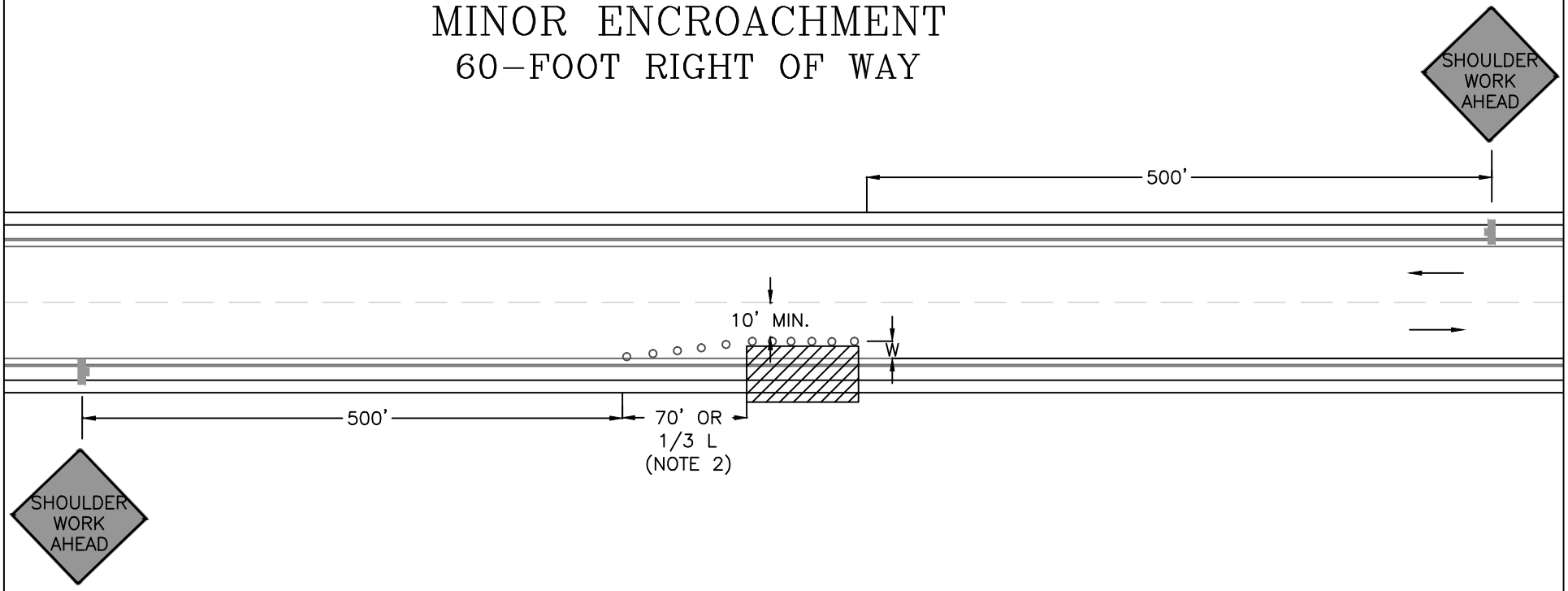

NOTES:

1. FOR NIGHTTIME USE, CONES AND WARNING SIGNS SHALL BE EQUIPPED WITH LIGHTING DEVICES FOR MAXIMUM VISIBILITY.

2. THIS EXAMPLE IS FOR A 40 MPH SPEED LIMIT (S) AND AN OFFSET (W) OF 8.0'. L = WSS/60. IN THIS EXAMPLE, L = (8x40x40)/60 = 213.3'. 1/3 L = 213.3/3 = 71 OR ROUND TO 70.0'.

DRAWN BY AM	Layton City	STANDARD DRAWING SLDR 60' ROW
SCALE NONE		
DATE 5/08		ST–ST–22
REVISIONS 3/12		

LANE CLOSURE ON TWO LANE ROAD WITH LOW TRAFFIC VOLUMES

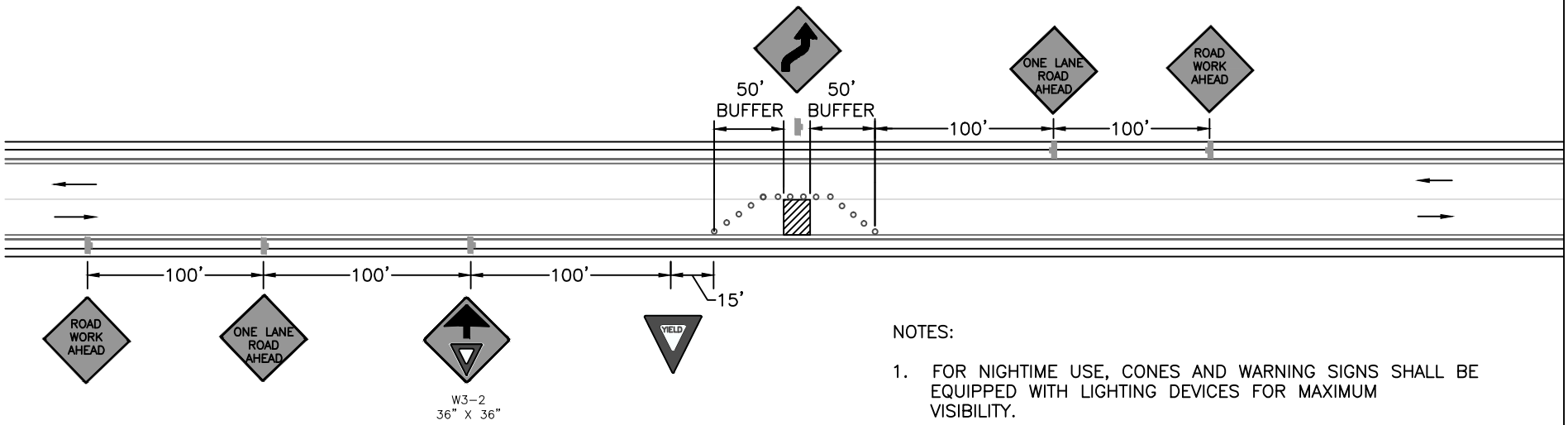

NOTES:

1. FOR NIGHTIME USE, CONES AND WARNING SIGNS SHALL BE EQUIPPED WITH LIGHTING DEVICES FOR MAXIMUM VISIBILITY.

DRAWN BY AM	Layton City	STANDARD DRAWING LANE CLOSURE
SCALE NONE		
DATE 6/08		ST-ST-23
REVISIONS 3/12		

SIGN SPACING CHART	
POSTED SPEED(S) MPH	MINIMUM SIGN SPACING (A)
30 AND LOWER	100 FT
35	350 FT
40	
45	

LANE SHIFT

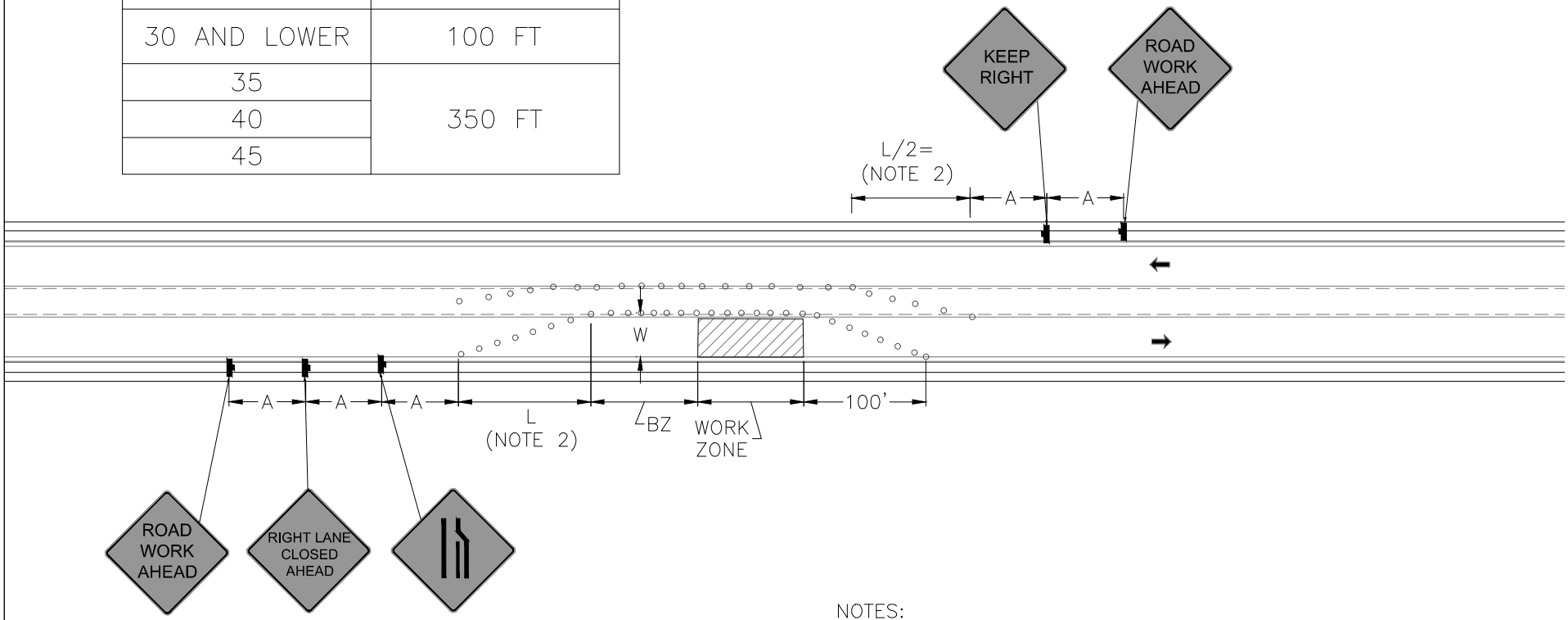

NOTES:

1. FOR NIGHTTIME USE, CONES AND WARNING SIGNS SHALL BE EQUIPPED WITH LIGHTING DEVICES FOR MAXIMUM VISIBILITY.

2. FOR SPEEDS OF 40 MPH AND LESS $L = (W*S^2)/60$. FOR SPEEDS GREATER THAN 40 MPH $L = W*S$, WHERE S = POSTED SPEED.

3. 10.0–FT MIN LANES REQUIRED.

DRAWN BY AM	Layton City	STANDARD DRAWING
SCALE NONE		LANE SHIFT
DATE 6/08		ST–ST–24
REVISIONS		

TEMPORARY MAIL SERVICE

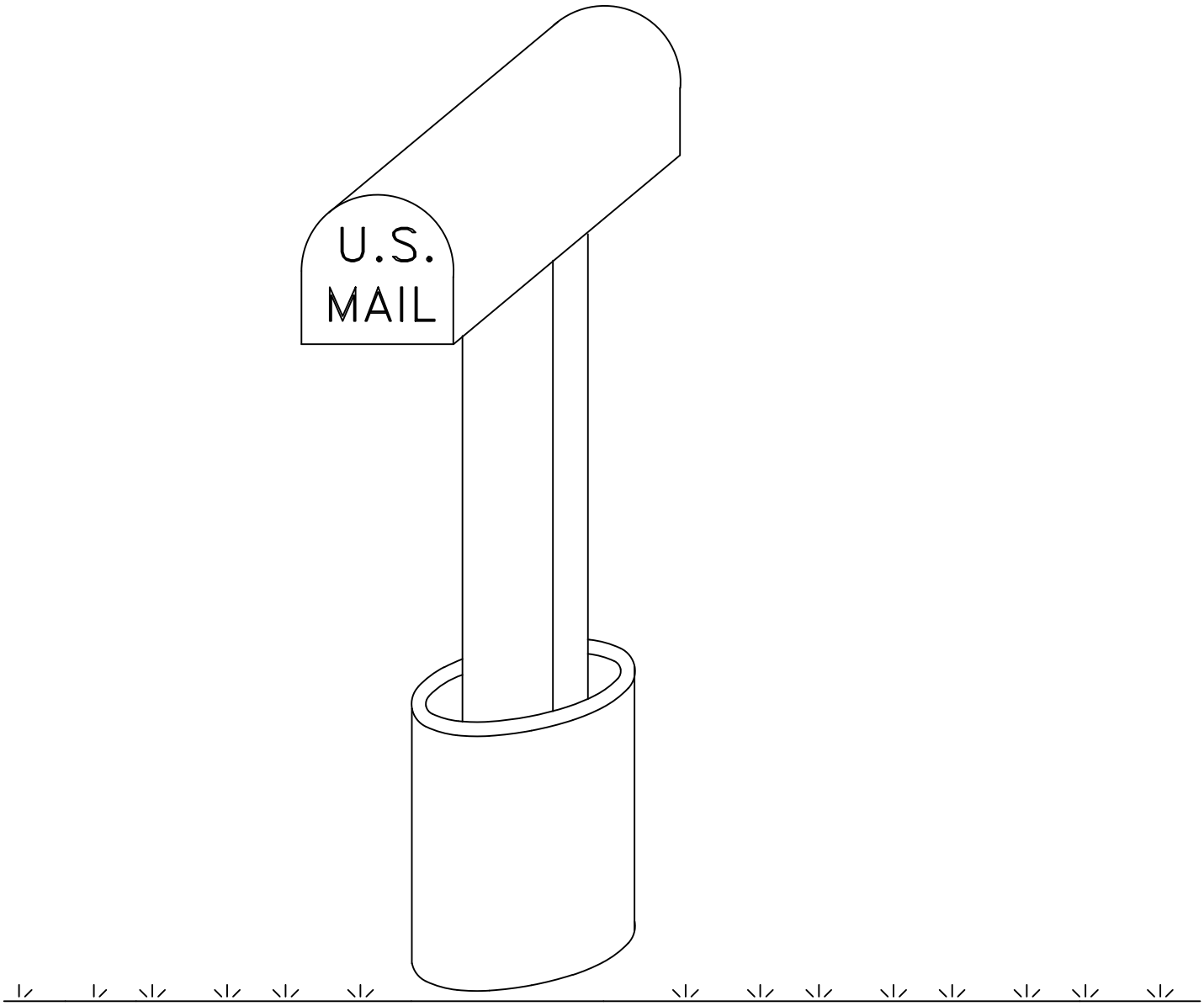

ACCEPTABLE TEMPORARY MAIL SERVICE
MUST BE MOVABLE AND ON STABLE BASE

DRAWN BY DHR	Layton City	STANDARD DRAWING
SCALE NONE		MAILBOX
DATE 3/94		ST–ST–25
REVISIONS		

ROUNDABOUT

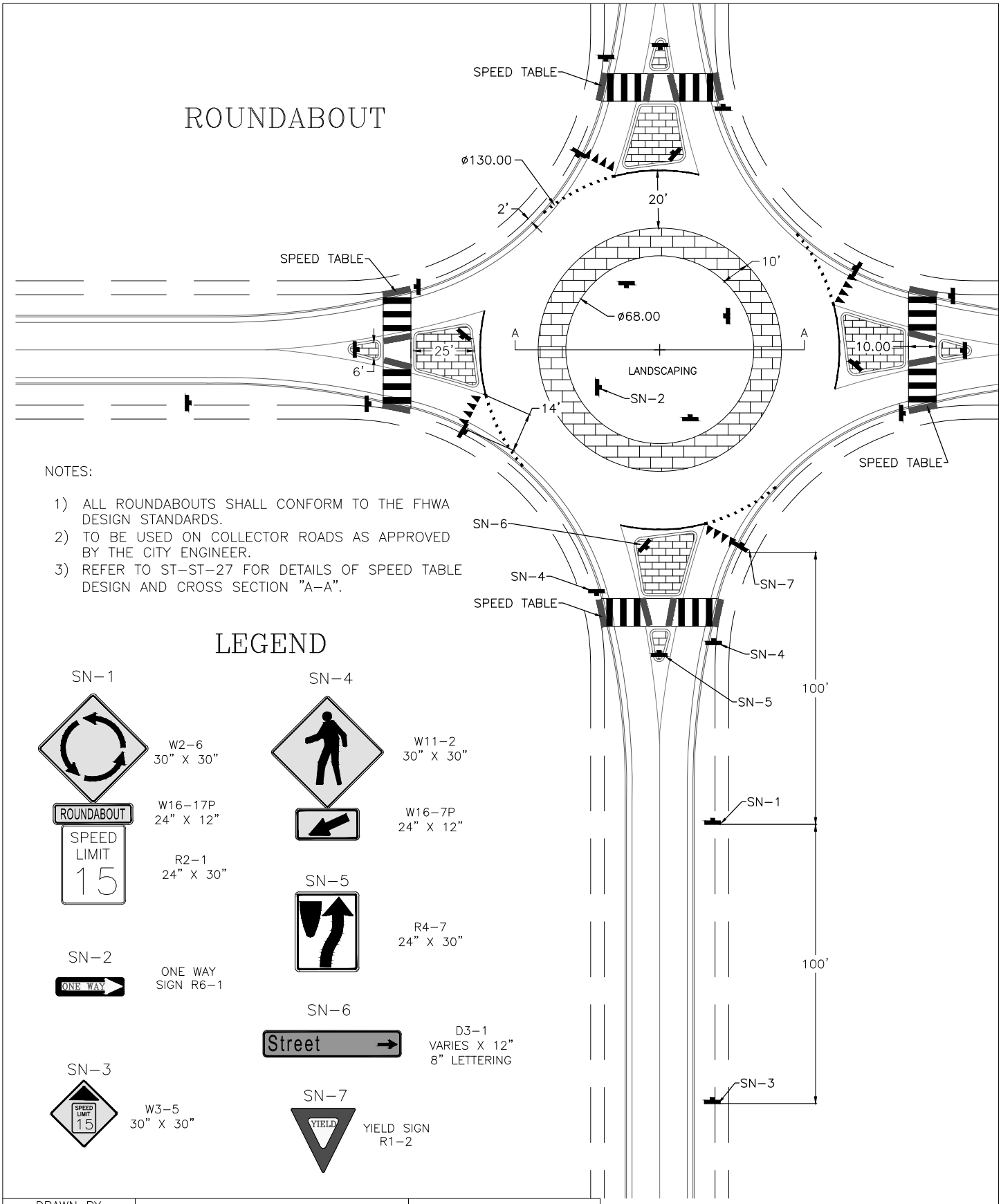

NOTES:

1) ALL ROUNDABOUTS SHALL CONFORM TO THE FHWA DESIGN STANDARDS.
2) TO BE USED ON COLLECTOR ROADS AS APPROVED BY THE CITY ENGINEER.
3) REFER TO ST-ST-27 FOR DETAILS OF SPEED TABLE DESIGN AND CROSS SECTION "A-A".

LEGEND

SN-1

W2-6
30" X 30"

W16-17P
24" X 12"

R2-1
24" X 30"

SN-2

ONE WAY
SIGN R6-1

SN-3

W3-5
30" X 30"

SN-4

W11-2
30" X 30"

W16-7P
24" X 12"

SN-5

R4-7
24" X 30"

SN-6

D3-1
VARIES X 12"
8" LETTERING

SN-7

YIELD SIGN
R1-2

DRAWN BY AB	Layton City	STANDARD DRAWING
SCALE NONE		ROUNDABOUT
DATE 2/16		ST-ST-26
REVISIONS		

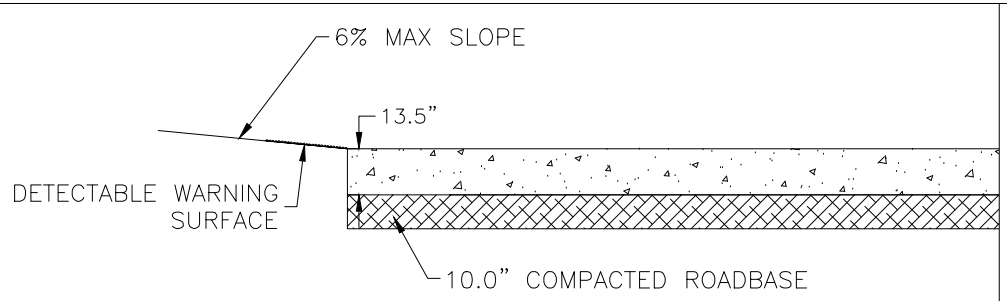

SPEED TABLE TIE INTO SIDEWALK

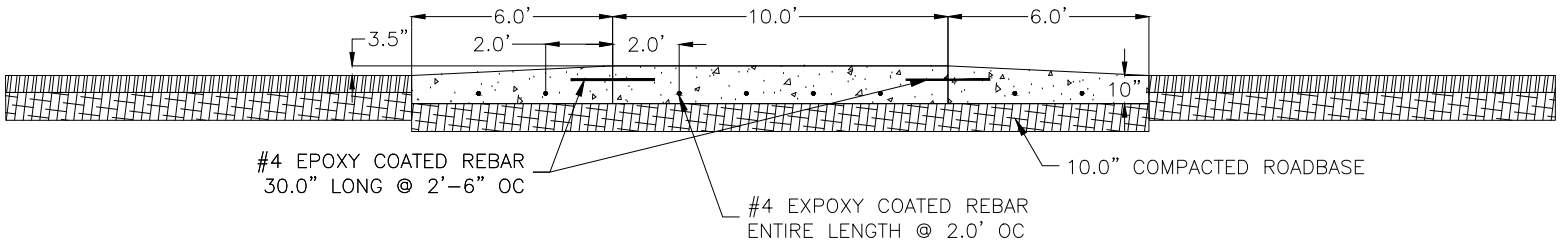

SPEED TABLE DESIGN

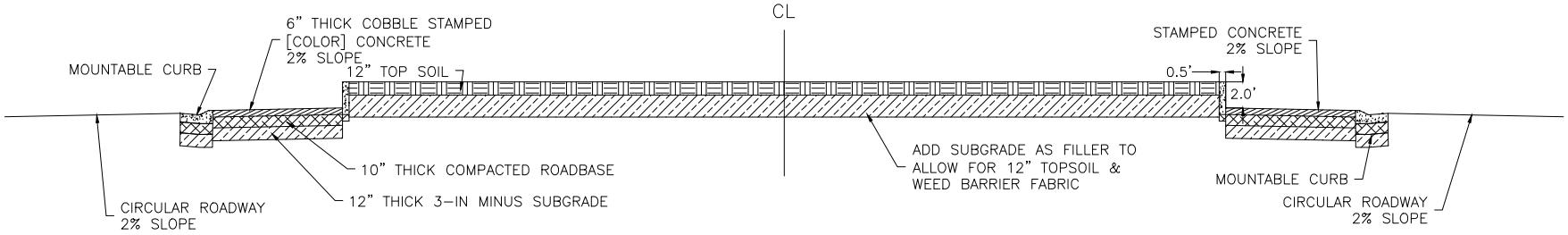

TYPICAL CROSS SECTION "A-A"

DRAWN BY AB	Layton City	STANDARD DRAWING ROUND DETAIL	ROUNDABOUT DETAILS
SCALE NTS			
DATE 4/16		ST-ST-27	
REVISIONS NONE			

TRAFFIC CIRCLE

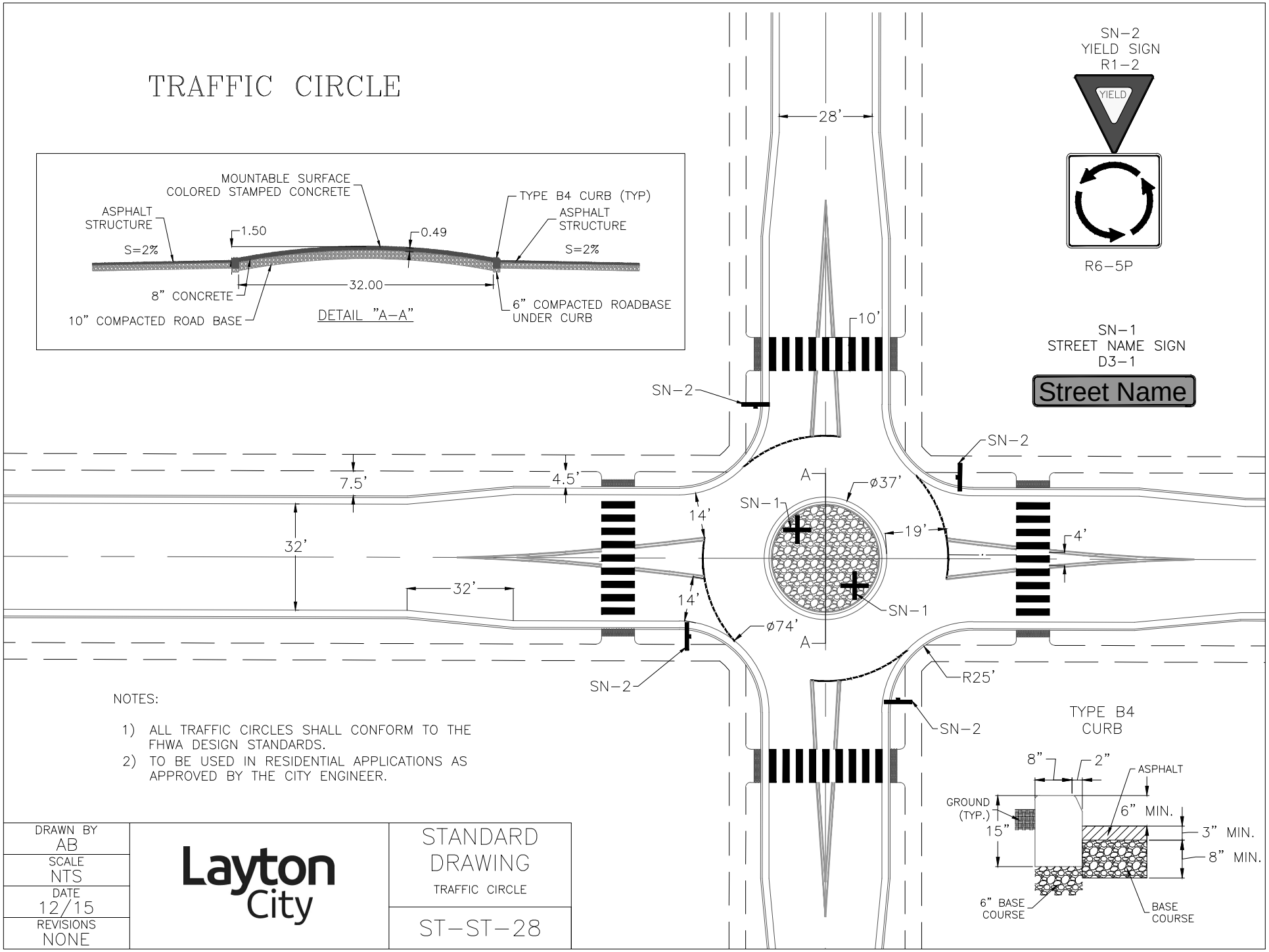

SN–2
YIELD SIGN
R1–2

R6–5P

SN–1
STREET NAME SIGN
D3–1

Street Name

TYPE B4
CURB

NOTES:

1) ALL TRAFFIC CIRCLES SHALL CONFORM TO THE FHWA DESIGN STANDARDS.
2) TO BE USED IN RESIDENTIAL APPLICATIONS AS APPROVED BY THE CITY ENGINEER.

DRAWN BY AB	Layton City	STANDARD DRAWING TRAFFIC CIRCLE
SCALE NTS		
DATE 12/15		ST–ST–28
REVISIONS NONE		

STANDARD CROSSWALK SIGNS AND STRIPING

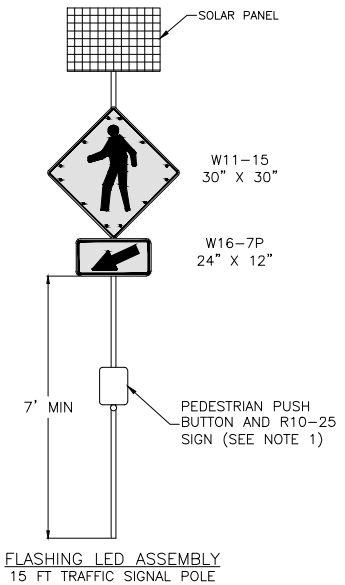

NOTES:

1. THE CITY ENGINEER MAY APPROVE HAVING THE LIGHTS FLASH AT ALL TIMES. IN THIS CASE, THE PEDESTRIAN PUSH BUTTON SHOULD NOT BE INSTALLED.

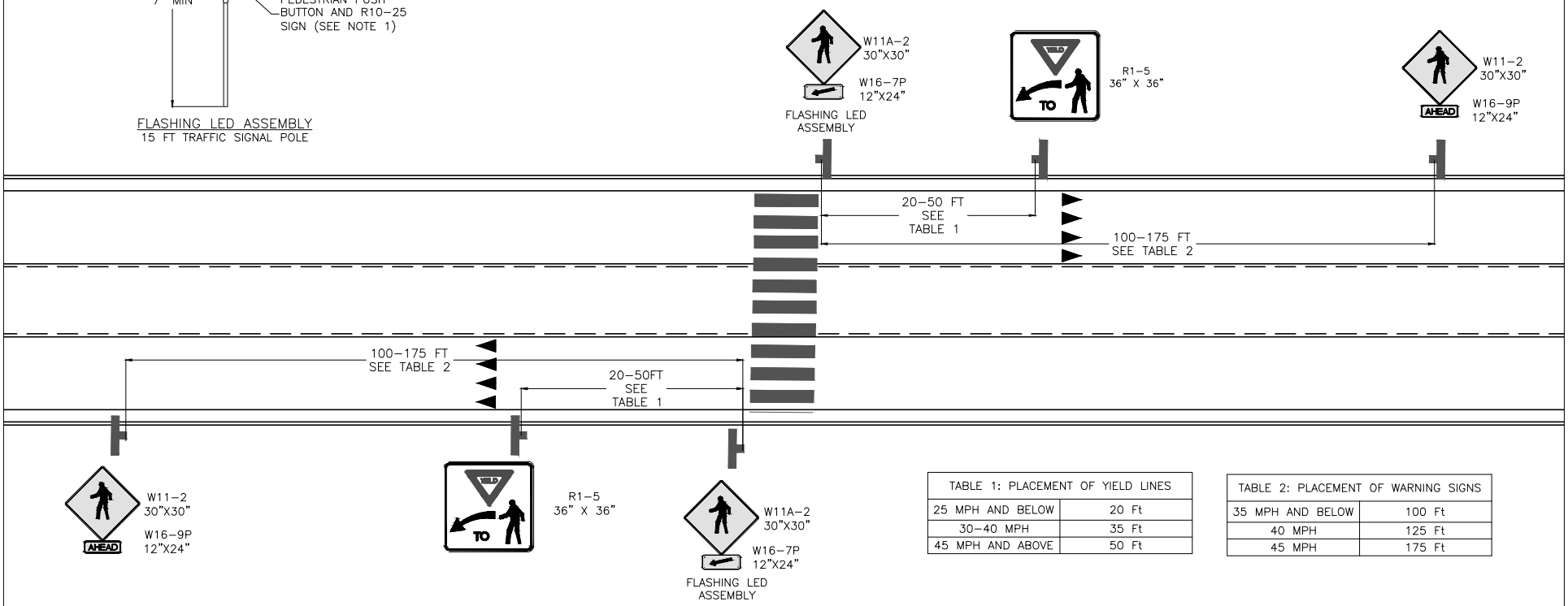

TABLE 1: PLACEMENT OF YIELD LINES	
25 MPH AND BELOW	20 Ft
30-40 MPH	35 Ft
45 MPH AND ABOVE	50 Ft

TABLE 2: PLACEMENT OF WARNING SIGNS	
35 MPH AND BELOW	100 Ft
40 MPH	125 Ft
45 MPH	175 Ft

DRAWN BY AB	Layton City	STANDARD DRAWING CROSSWALKS
SCALE NONE		
DATE 2/16		ST-ST-29
REVISIONS		

STANDARD PLANS

FOR CULINARY WATER SYSTEMS

APRIL 2016

James Woodruff, City Engineer
Shannon Hansen, Assistant City Engineer – Development
Stephen Jackson, Assistant City Engineer – Capital Projects
Staff Engineers: Ryan Bankhead, Ashley Thoman, Mark Stenquist, Stacy Majewski, Amy Bean

CULINARY WATER DRAWINGS INDEX

DETAIL NAME	ABBREV.	PAGE #
3/4” & 1” Water Service Connection	1” METER	ST-WL-01
Jumper Specifications for 3/4” or 1” Meter	JUMPER	ST-WL-02
HDPE Meter Box for 1 1/2” or 2” Water Service	2” HDPE METER BOX	ST-WL-03
Concrete Meter Box for 1 1/2” or 2” Water Service	2” CONC METER BOX	ST-WL-04
4”, 6’, or 8” Octave Meter without Reducer	OCTAVE METER NO REDUCER	ST-WL-05
3” or 4” Octave Meter with Reducer	OCTAVE METER W/REDUCER	ST-WL-06
Reserved		ST-WL-07
Reserved		ST-WL-08
Reserved		ST-WL-09
Reserved		ST-WL-10
Reserved		ST-WL-11
Water Meter Vault	VAULT	ST-WL-12
Tracing Wire Installation	TRACING WIRE	ST-WL-13
Water Line Loop	WL-LOOP	ST-WL-14
Direct Bearing Thrust Blocks	THRUST	ST-WL-15
Air-Vacuum Relief Station (In Street)	AIR-VAC	ST-WL-16
Air-Vacuum Relief Station (In Park Strip)	AIR-VAC PARK STRIP	ST-WL-17
Fire Hydrant Installation (Valve at Main Line)	FH-DET2	ST-WL-18
Flushing Hydrant	FLUSHING HYDRANT	ST-WL-19
Minimum Clearance Around Fire Hydrant	FH-CLEARANCE	ST-WL-20

3/4" & 1" WATER SERVICE CONNECTION

FOR QUESTIONS ON METER SET-UP OR INSTALLATION, CONTACT THE LAYTON CITY WATER DEPARTMENT AT 801-336-3720.

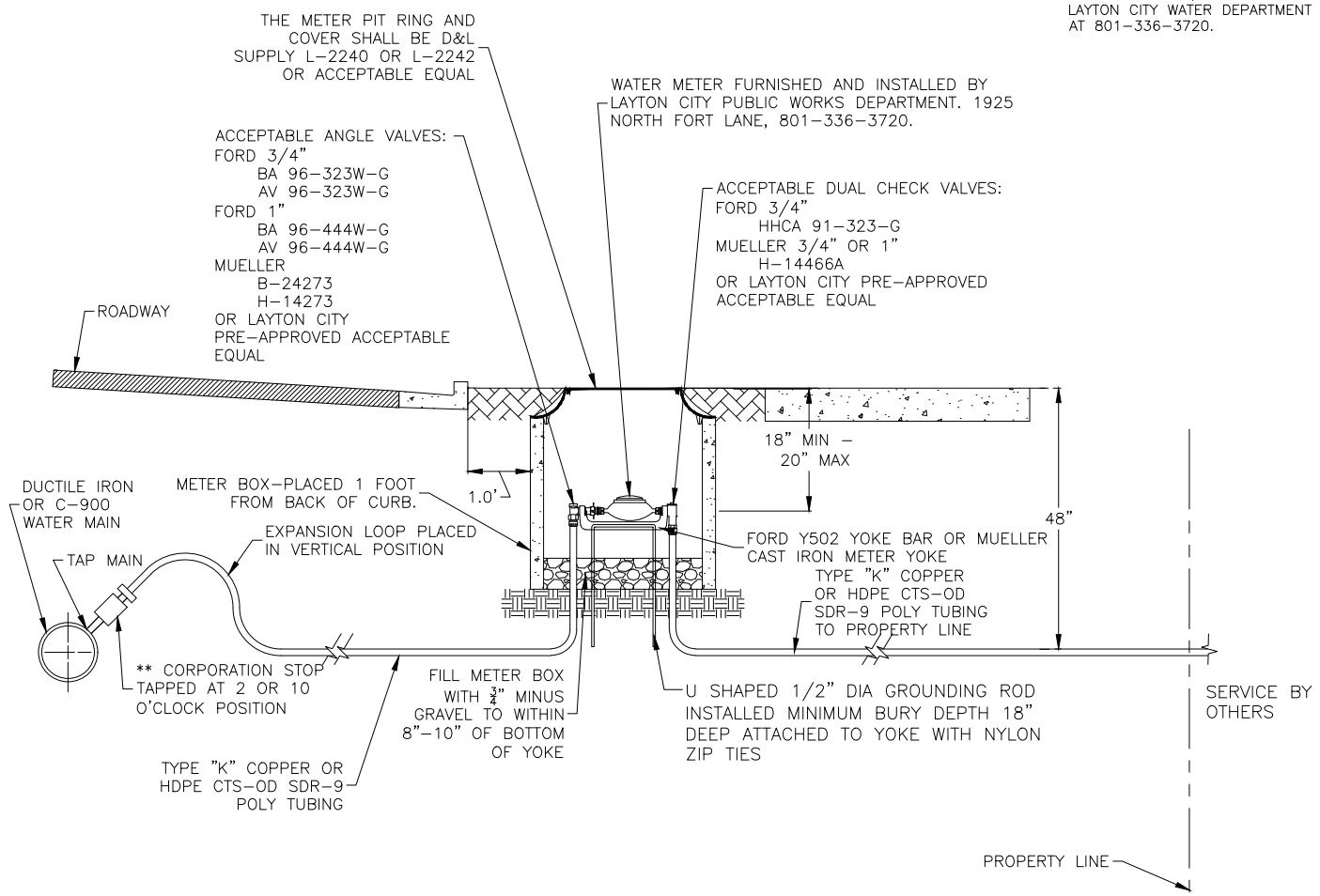

SECTION

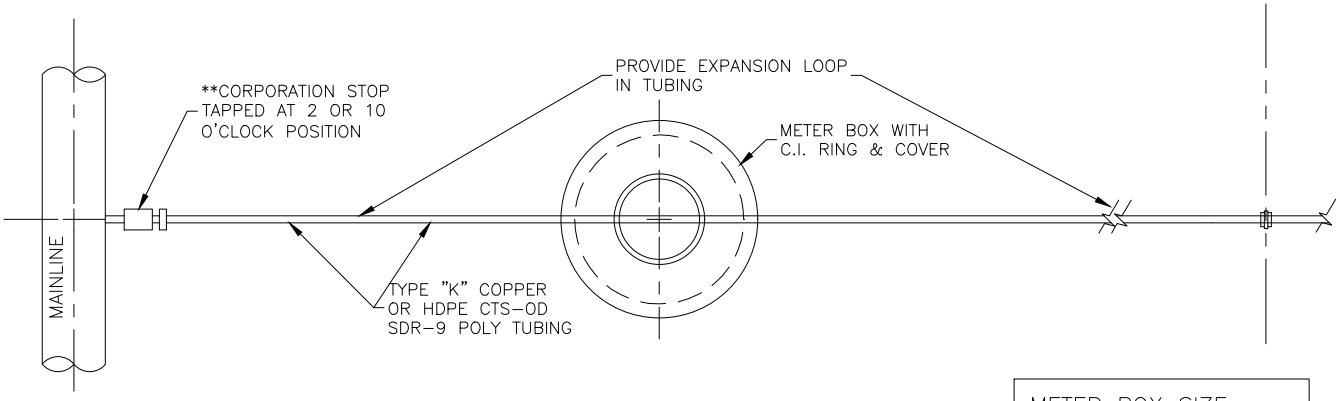

PLAN

METER BOX SIZE
3/4" SERVICE (21" X 36" BOX)
1" SERVICE (21" X 36" BOX)

NOTES: ALL RESIDENTIAL METERS SHALL BE PLACED 1.0' BEHIND THE SIDEWALK IF THE SIDEWALK ABUTS THE CURB & GUTTER.

TRACING WIRE SHALL TERMINATE INSIDE METER BOX AND BE CONNECTED TO GROUND ROD.

* ACCEPTABLE METER BOX MATERIAL: PRECAST CONCRETE OR CORRUGATED POLYETHYLENE PIPE CONFORMING TO AASHTO M294 TYPE S, WITH A SMOOTH INTERIOR LINER.

** ACCEPTABLE CORPORATION STOPS
FORD CORPORATION STOPS
FB-1000 F-1000
MUELLER CORPORATION STOPS
B-25008 H-15008
OR LAYTON CITY PRE-APPROVED ACCEPTABLE EQUAL

DRAWN BY DHR	Layton City	STANDARD DRAWING
SCALE NONE		1" METER
DATE 10/97		ST-WL-01
REVISIONS 1/15		

JUMPER SPECIFICATIONS FOR 3/4" OR 1" METER

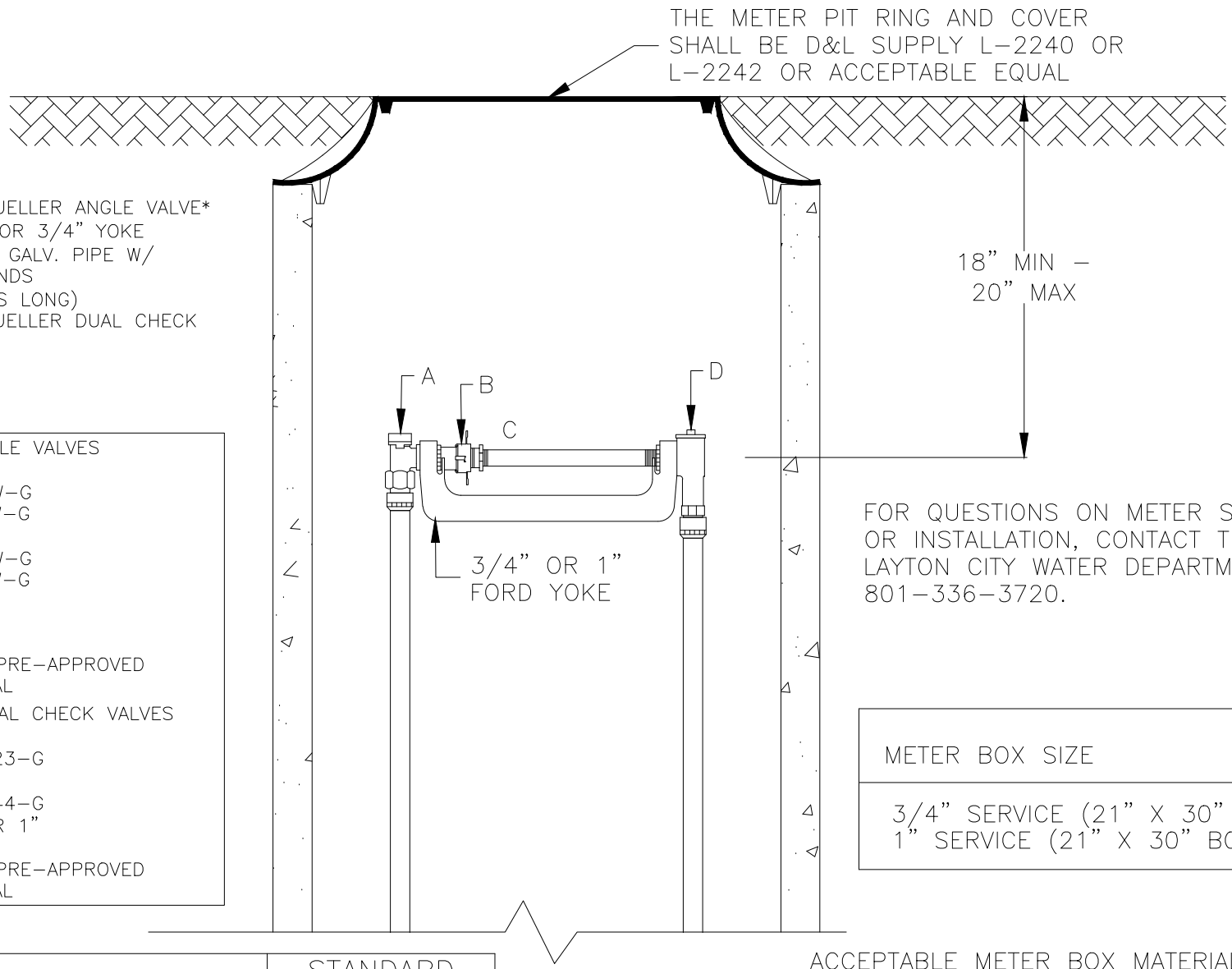

A – FORD OR MUELLER ANGLE VALVE*
B – EXPANDER FOR 3/4" YOKE
C – 3/4" OR 1" GALV. PIPE W/ THREADED ENDS (10.5 INCHES LONG)
D – FORD OR MUELLER DUAL CHECK VALVE**

*ACCEPTABLE ANGLE VALVES
FORD 3/4"
BA 96-323W-G
AV 96-323W-G
FORD 1"
BA 96-444W-G
AV 96-444W-G
MUELLER
B-24273
H-14273
OR LAYTON CITY PRE-APPROVED ACCEPTABLE EQUAL

**ACCEPTABLE DUAL CHECK VALVES
FORD 3/4"
HHCA 91-323-G
FORD 1"
HHCA 91-444-G
MUELLER 3/4" OR 1"
H-14466A
OR LAYTON CITY PRE-APPROVED ACCEPTABLE EQUAL

FOR QUESTIONS ON METER SET-UP OR INSTALLATION, CONTACT THE LAYTON CITY WATER DEPARTMENT AT 801-336-3720.

METER BOX SIZE
3/4" SERVICE (21" X 30" BOX) 1" SERVICE (21" X 30" BOX)

ACCEPTABLE METER BOX MATERIAL: PRECAST CONCRETE OR CORRUGATED POLYETHYLENE PIPE CONFORMING TO AASHTO M294 TYPE S, WITH A SMOOTH INTERIOR LINER.

DRAWN BY DHR	Layton City	STANDARD DRAWING JUMPER
SCALE NONE		
DATE 4/04		ST-WL-02
REVISIONS 5/09		

HDPE METER BOX FOR 1 1/2" OR 2" WATER SERVICE

ST–WL–04 REQUIRED FOR METERS LOCATED IN TRAFFIC AREA

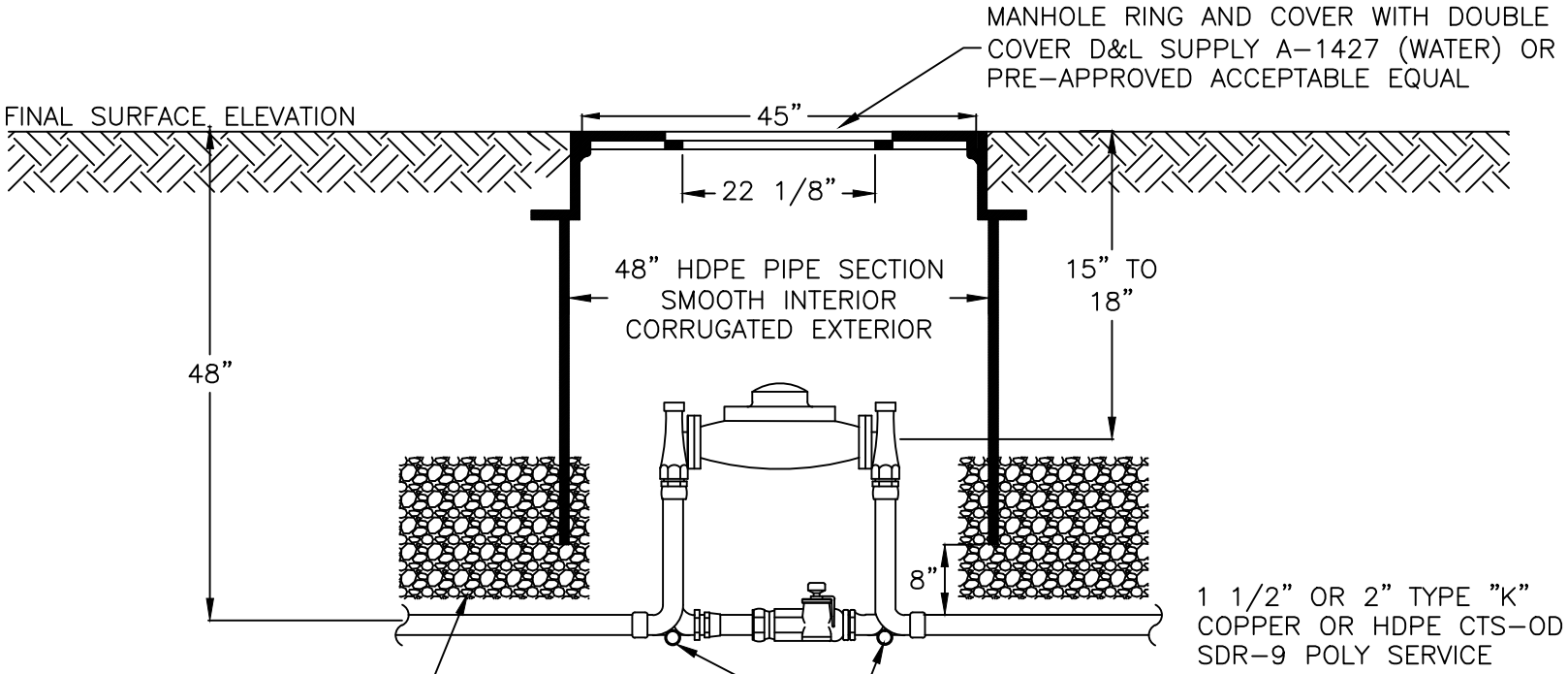

FORD CUSTOM SETTER
1 1/2" – VFH66–18"x13"
2" – VFH77–18"x17"

NOTE: TRACING WIRE SHALL TERMINATE IN METER BOX.

METER SHALL BE MASTER METER WITH 3G RADIO READER PROVIDED BY LAYTON CITY PUBLIC WORKS WATER DEPARTMENT. 1925 NORTH FORT LANE, 801–336–3720

DRAWN BY DHR	Layton City	STANDARD DRAWING 2" HDPEMETER
SCALE NONE		
DATE 4/10		
REVISIONS 1/15		ST–WL–03

CONCRETE METER BOX FOR 1 1/2" OR 2" WATER SERVICE

CONCRETE BOX REQUIRED IF METER IS LOCATED IN TRAFFIC AREA

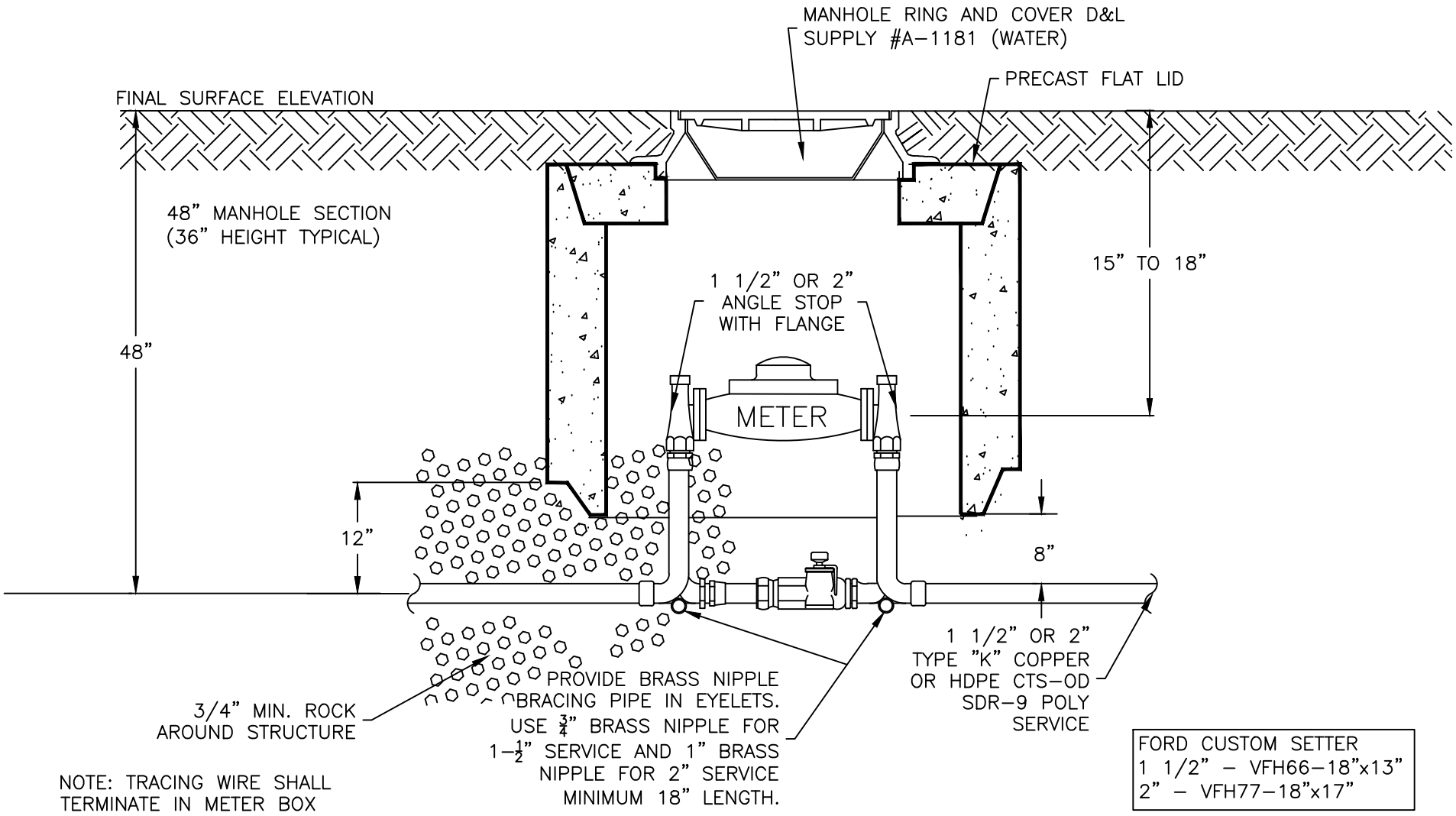

NOTE: TRACING WIRE SHALL TERMINATE IN METER BOX

FORD CUSTOM SETTER
1 1/2" – VFH66-18"x13"
2" – VFH77-18"x17"

DRAWN BY DHR	Layton City	STANDARD DRAWING 2" CONC METER BOX
SCALE NONE		
DATE 4/04		
REVISIONS 1/15		ST-WL-04

METER SHALL BE MASTER METER WITH 3G RADIO READER PROVIDED BY LAYTON CITY PUBLIC WORKS WATER DEPARTMENT. 1925 NORTH FORT LANE, 801-336-3720

4", 6", or 8" Octave Meter Installation With 8" Bypass

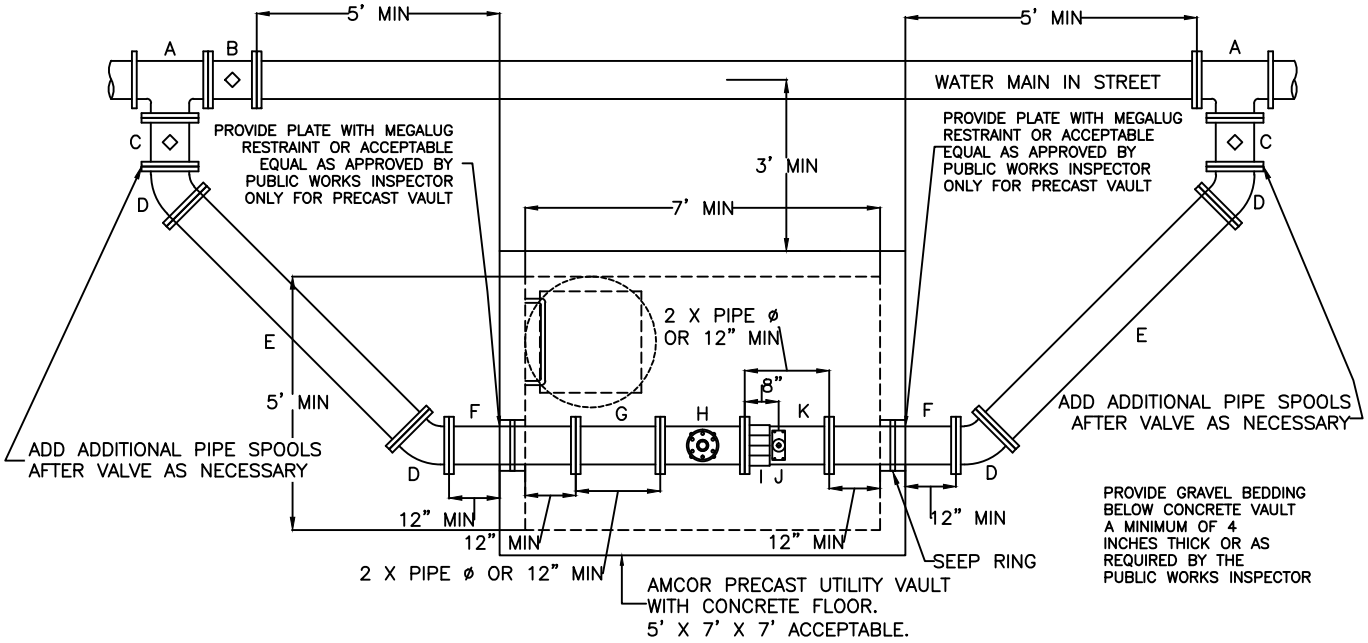

Water Meter Size				
PART	4"	6"	8"	QUANTITY
A	8" X 8" X 4" FLG TEE	8" X 8" X 6" FLG TEE	8" X 8" X 8" FLG TEE	2
B	8" FLG GATE VALVE	8" FLG GATE VALVE	8" FLG GATE VALVE	1
C	4" FLG GATE VALVE	6" FLG GATE VALVE	8" FLG GATE VALVE	2
D	4" FLG 45° BEND	6" FLG 45° BEND	8" FLG 45° BEND	4
E	4" FLG X PE PIPE	6" FLG X PE PIPE	8" FLG X PE PIPE	2
F	4" X 2'-6" FLG X FLG PIPE WITH SEEP RING	6" X 2'-6" FLG X FLG PIPE WITH SEEP RING	8" X 2'-6" FLG X FLG PIPE WITH SEEP RING	2
G	4" X 1'-11" FL X FL PIPE	6" X 1'-9" FL X FL PIPE	8" X 1'-8" FL X FL PIPE	1
**H	4" MASTER OCTAVE METER WITH 3G RADIO HEAD	6" MASTER OCTAVE METER WITH 3G RADIO HEAD	8" MASTER OCTAVE METER WITH 3G RADIO HEAD	1
I	4" FL COUPLING ADAPTER	6" FL COUPLING ADAPTER	8" FL COUPLING ADAPTER	1
J	4" X 2" BRASS SADDLE W/ PLUG	6" X 2" BRASS SADDLE W/ PLUG	8" X 2" BRASS SADDLE W/ PLUG	1
K	4" X 1'-11" FL X PE PIPE	6" X 1'-9" FL X PE PIPE	8" X 1'-8" FL X PE PIPE	1

** DENOTES MATERIAL SUPPLIED BY LAYTON CITY WATER DEPARTMENT
1925 NORTH FORT LANE, 336-3720

8" METER WILL SERVICE UP TO 2800 GALLONS PER MINUTE

6" METER WILL SERVICE UP TO 1600 GALLONS PER MINUTE

4" METER WILL SERVICE UP TO 1000 GALLONS PER MINUTE

DRAWN BY SWJ	Layton City	STANDARD DRAWING
SCALE NONE		OCTAVE METER NO REDUCER
DATE 5/14		ST-WL-05
REVISIONS 1/15		

3" or 4" Octave Meter Installation With 8" Bypass And Reducer

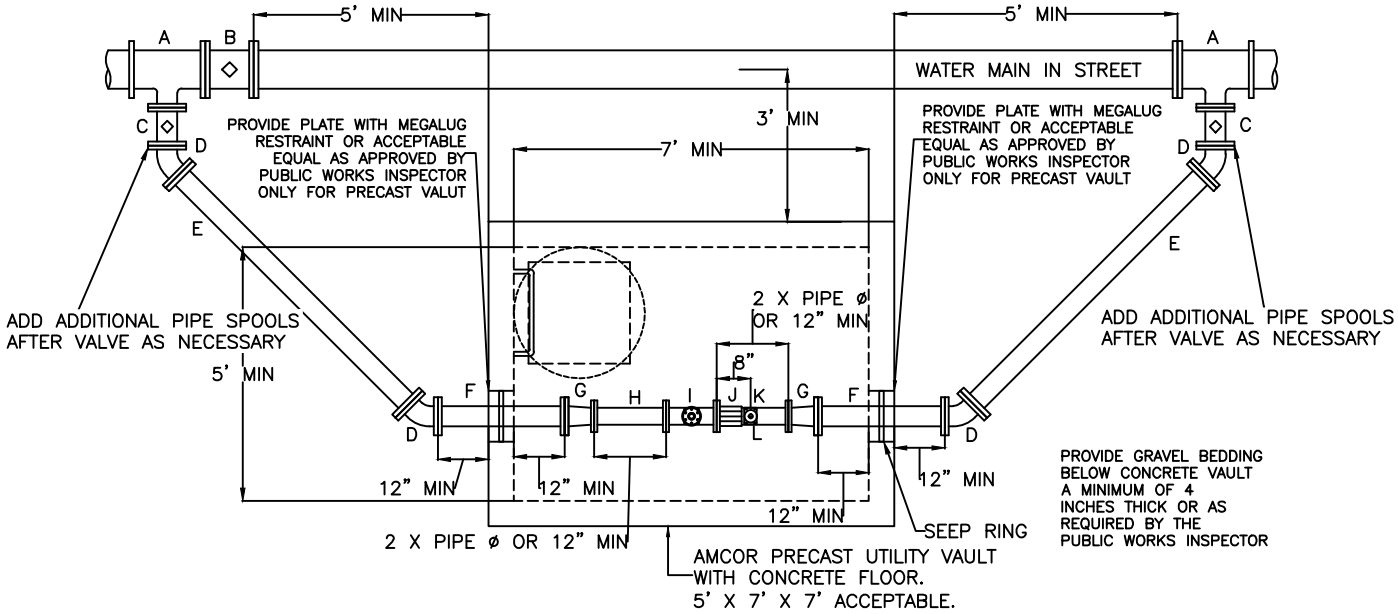

Water Meter Size			
PART	3"	4"	QUANTITY
A	8" X 8" X 4" FLG TEE	8" X 8" X 6" FLG TEE	2
B	8" FLG GATE VALVE	8" FLG GATE VALVE	1
C	4" FLG GATE VALVE	6" FLG GATE VALVE	2
D	4" FLG 45° BEND	6" FLG 45° BEND	4
E	4" FLG X PE PIPE	6" FLG X PE PIPE	2
F	4" X 2'-6" FLG X FLG PIPE WITH SEEP RING	6" X 2'-6" FLG X FLG PIPE WITH SEEP RING	2
G	4" X 3" REDUCER	6" X 4" REDUCER	2
H	3" X 1'-5" FL X FL PIPE	4" X 1'-2" FL X FL PIPE	1
**I	3" MASTER OCTAVE METER WITH 3G RADIO HEAD	4" MASTER OCTAVE METER WITH 3G RADIO HEAD	1
J	3" FL COUPLING ADAPTER	4" FL COUPLING ADAPTER	1
K	3" X 2" BRASS SADDLE W/ PLUG	4" X 2" BRASS SADDLE W/ PLUG	1
L	3" X 1'-5" FL X PE PIPE	4" X 1'-2" FL X PE PIPE	1

** DENOTES MATERIAL SUPPLIED BY LAYTON CITY WATER DEPARTMENT
1925 NORTH FORT LANE, 336-3720

4" METER WILL SERVICE UP TO 1000 GALLONS PER MINUTE

3" METER WILL SERVICE UP TO 500 GALLONS PER MINUTE

DRAWN BY SWJ	Layton City	STANDARD DRAWING
SCALE NONE		OCTAVE METER W/ REDUCER
DATE 5/14		ST-WL-06
REVISIONS 1/15		

WATER METER VAULT

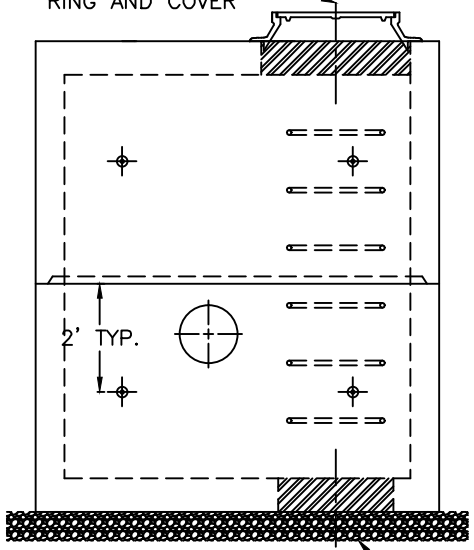

END VIEW

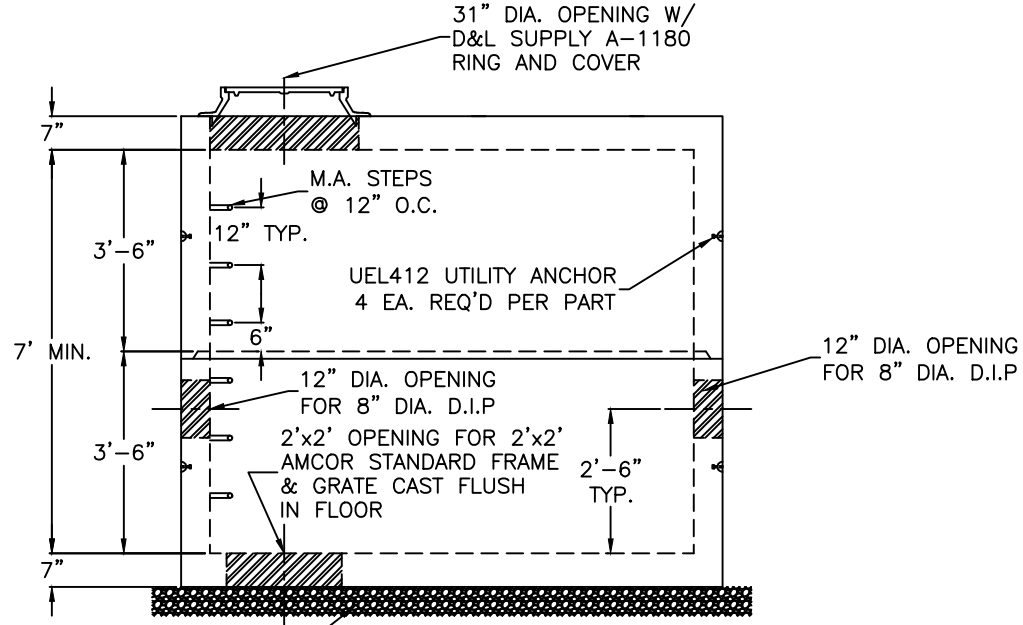

ELEVATION VIEW

PROVIDE GRAVEL BEDDING MINIMUM
4 INCHES THICK OR AS REQUIRED
BY THE PUBLIC WORKS INSPECTOR

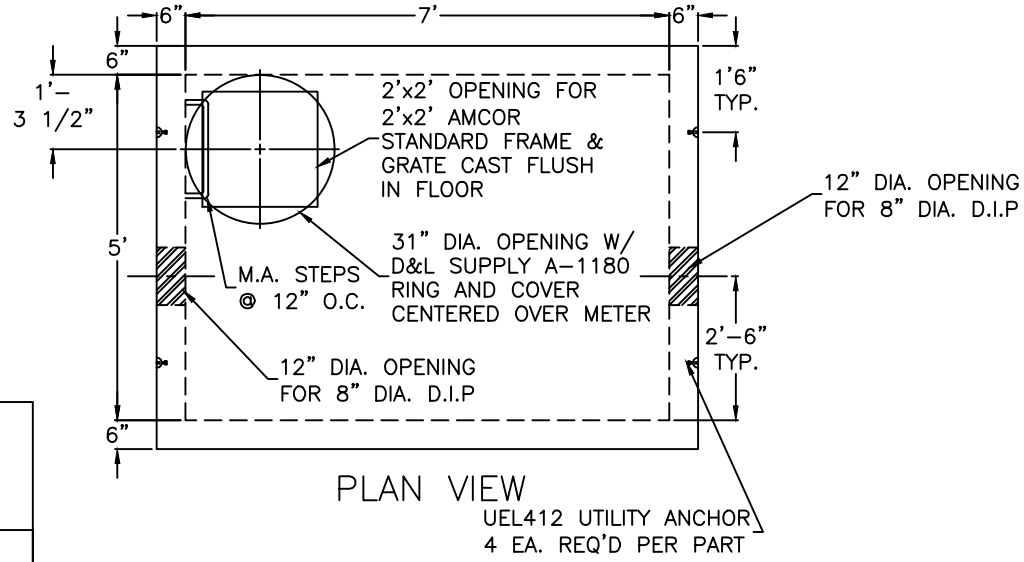

PLAN VIEW

DRAWN BY SWJ	Layton City	STANDARD DRAWING VAULT
SCALE NONE		
DATE 1/08		
REVISIONS 1/15		ST-WL-12

TRACING WIRE INSTALLATION

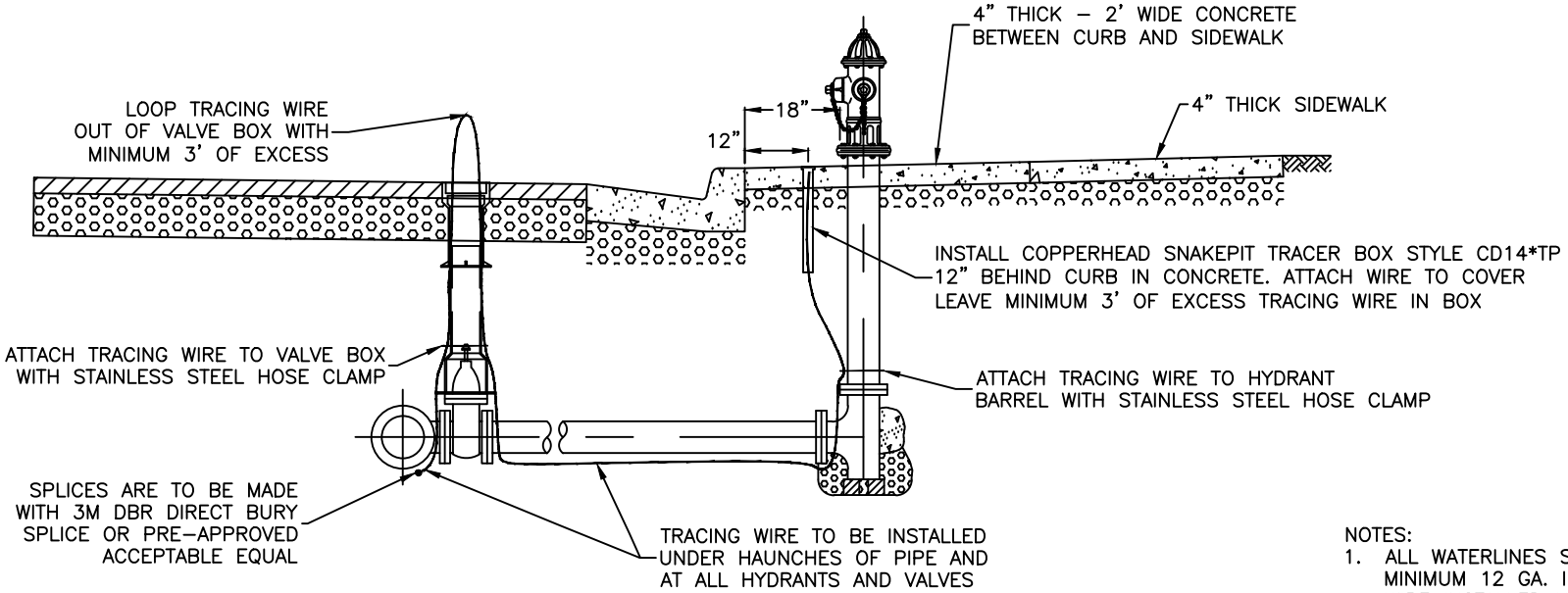

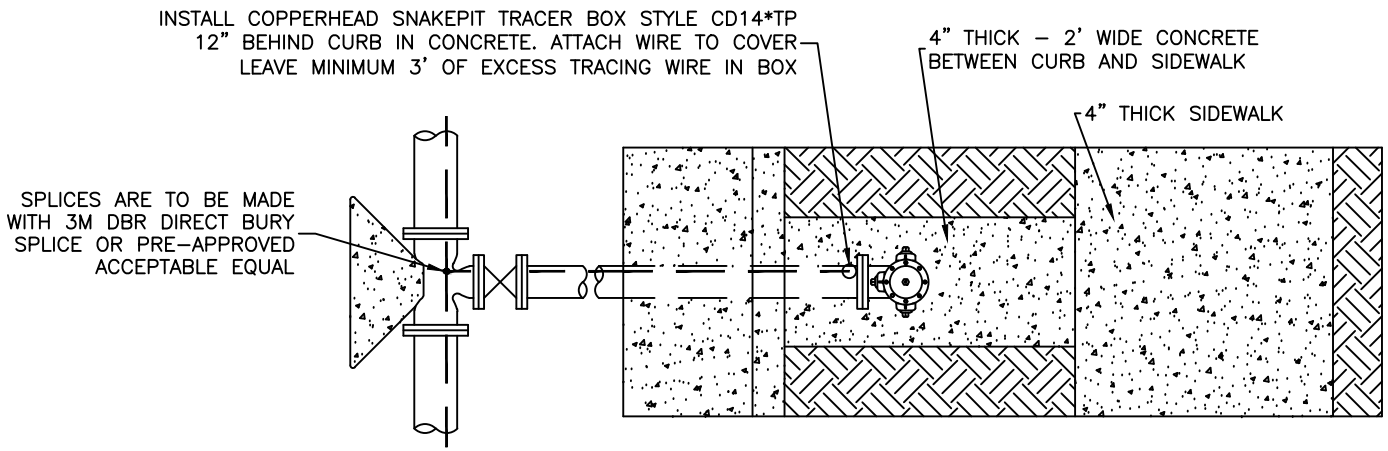

NOTES:

1. ALL WATERLINES SHALL HAVE A MINIMUM 12 GA. INSULATED TRACING WIRE INSTALLED UNDER THE HAUNCHES OF THE PIPE PRIOR TO BACKFILLING.
2. TRACING WIRES SHALL TERMINATE INSIDE OF ALL VALVE BOXES AND FIRE HYDRANTS. AT SERVICE SADDLES AND TAPPING SLEEVES, THE TRACING WIRE SHALL NOT BE ALLOWED TO BE PLACED BETWEEN THE SADDLE AND THE PIPE. A GROUNDING ROD SHALL BE INSTALLED AT ALL TRACER SYSTEM TERMINAL POINTS.
3. TRACING WIRE SHALL BE COPPER WIRE WITH BLUE INSULATION RATED FOR DIRECT BURIAL. ALL WIRE CONNECTORS SHALL BE 3M DBR DIRECT BURY SPLICE OR PRE–APPROVED ACCEPTABLE EQUAL AND SHALL BE WATERTIGHT TO PROVIDE ELECTRICAL CONTINUITY.
4. ALL TRACING WIRE SHALL BE TESTED FOR CONTINUITY IN THE PRESENCE OF THE PUBLIC WORKS INSPECTOR PRIOR TO ASPHALT PLACEMENT. ANY TRACING WIRE FOUND NOT TO BE CONTINUOUS AFTER TESTING SHALL BE REPAIRED OR REPLACED BY THE CONTRACTOR PRIOR TO ASPHALT PLACEMENT.

DRAWN BY SWJ	Layton City	STANDARD DRAWING
SCALE NONE		TRACING WIRE
DATE 3/12		ST–WL–13
REVISIONS		

WATER LINE LOOP

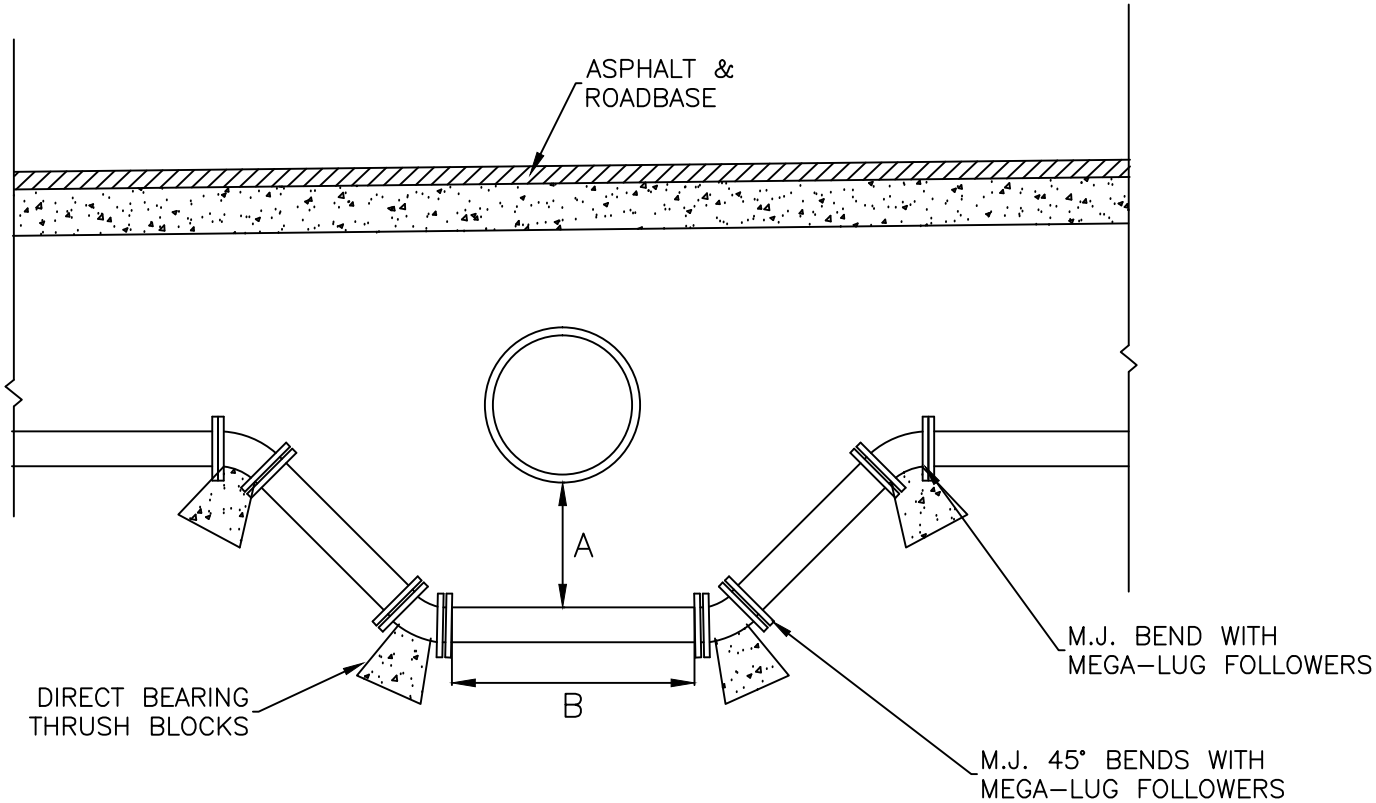

NOTE:
1. SEE ST–WL–15 FOR THRUST BLOCK SIZING.

2. SEE APWA PLAN 562 TIE DOWN THRUST RESTRAINTS.

TABLE OF DIMENSIONS

NO.	OBSTRUCTION	
	SEWER MAIN	OTHER
A	18"	12" MIN.
B	FULL PIPE LENGTH	O.D. + 12"

DRAWN BY DHR	Layton City	STANDARD DRAWING WL–LOOP
SCALE NONE		
DATE 11/93		
REVISIONS 2/02		ST–WL–14

DIRECT BEARING THRUST BLOCKS

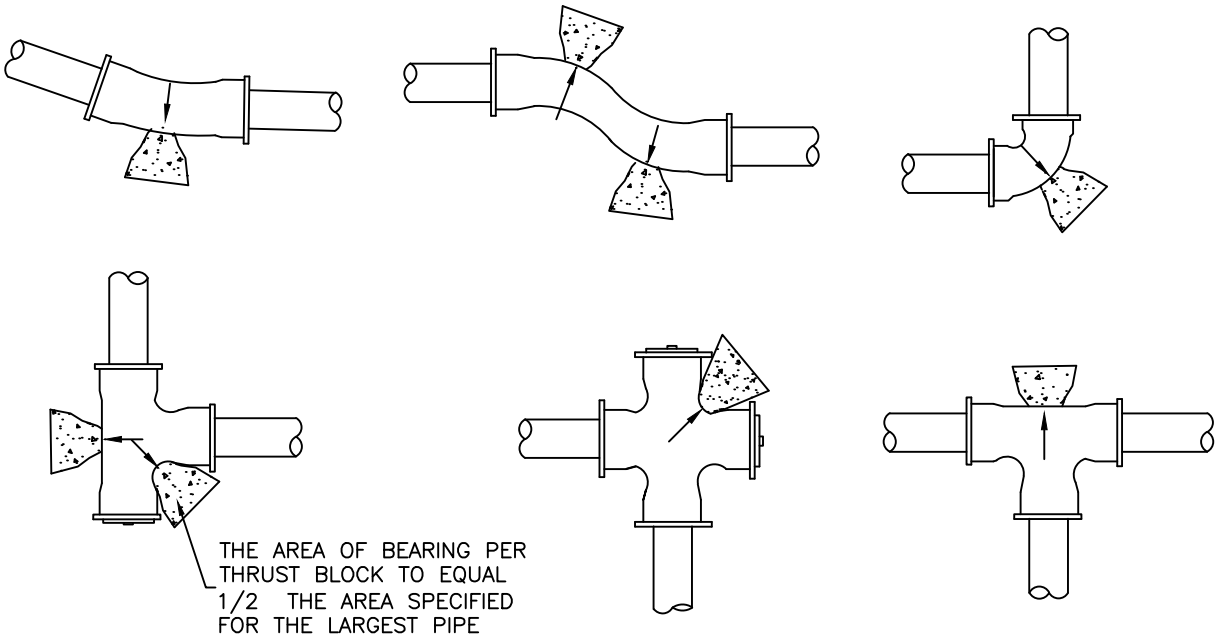

NOTES:

1. ALL WORK MUST BE INSPECTED PRIOR TO BACKFILL.

2. POUR THRUST BLOCKS AGAINST UNDISTURBED SOIL.

3. ALL PIPE JOINTS MUST BE LEFT ACCESSIBLE.

4. CURE CONCRETE FOR 5 DAYS PRIOR TO PRESSURIZING WATER LINES.

5. CONCRETE MUST HAVE A MINIMUM OF 4000 PSI COMPRESSIVE STRENGTH IN 28 DAYS.

6. POUR THRUST TO THE CONFIGURATION SHOWN.

7. BEARING AREAS FOR HORIZONTAL BEND THRUST BLOCKS ARE BASED ON TEST PRESSURE OF 100 PSI AND AN ALLOWABLE SOIL BEARING STRESS OF 2000 LBS./SQ.FT.

8. BEARING AREAS, VOLUMES, AND SPECIAL BLOCKING DETAILS SHOWN ON PLANS TAKE PRECEDENCE OVER THIS STANDARD.

9. BEARING AREAS FOR PIPE SIZES OR CONFIGURATIONS NOT SHOWN REQUIRE A SPECIAL DESIGN.

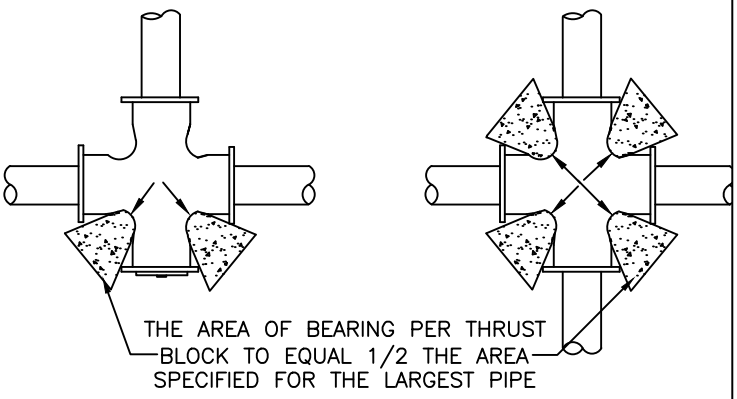

MINIMUM BEARING AREA IN SQUARE FT.					
SIZE OF PIPE	TEES, VAL., DEAD ENDS	90° BEND	45° BEND	22.5° BEND	11.25° BEND
4"	2	3	2	2	2
6"	4	5.5	3	1.5	1
8"	6	9.5	5	2.8	1.5
10"	8	12	6	4	3
12"	14	20	11	5.5	3
14"	19	26.5	14.5	7.5	4
16"	24	34	18.5	9.5	6
24"	53	74	41	21	53

DRAWN BY DHR	Layton City	STANDARD DRAWING
SCALE NONE		THRUST
DATE 1/98		ST–WL–15
REVISIONS		

AIR–VACUUM RELIEF STATION IN STREET

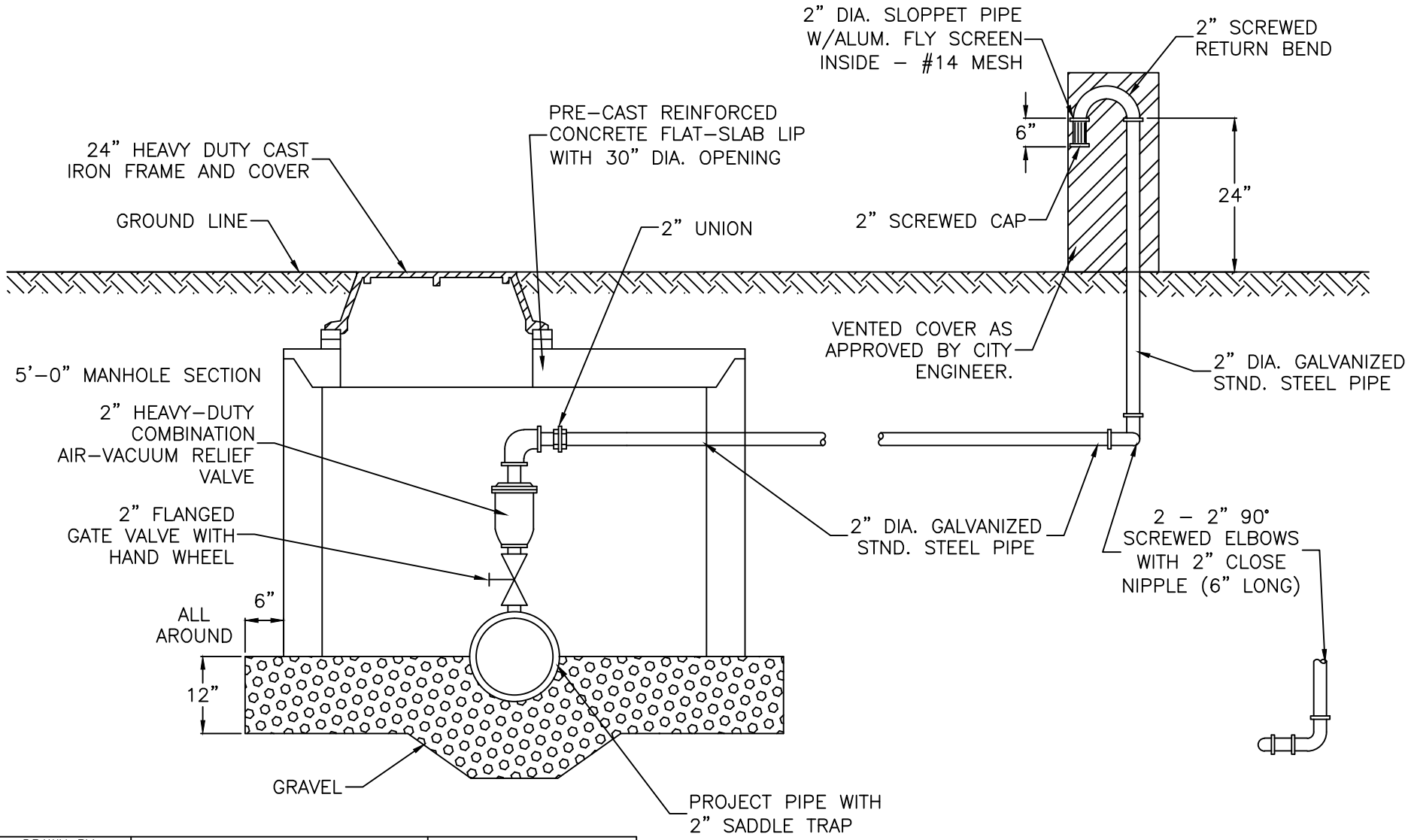

DRAWN BY DHR	Layton City	STANDARD DRAWING AIR–VAC
SCALE NONE		
DATE 9/01		ST–WL–16
REVISIONS		

AIR–VACUUM RELIEF STATION IN PARK STRIP

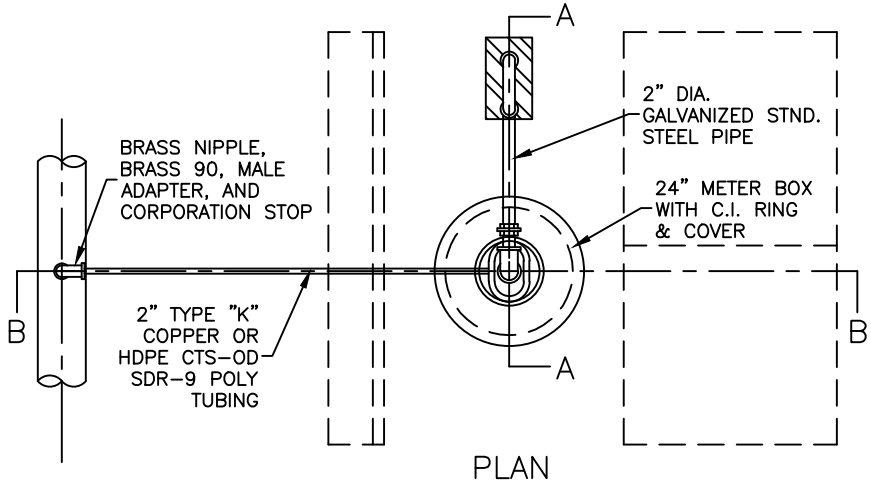

PLAN

* ACCEPTABLE METER BOX MATERIAL: PRECAST CONCRETE OR CORRUGATED POLYETHYLENE PIPE CONFORMING TO AASHTO M294 TYPE S, WITH A SMOOTH INTERIOR LINER.

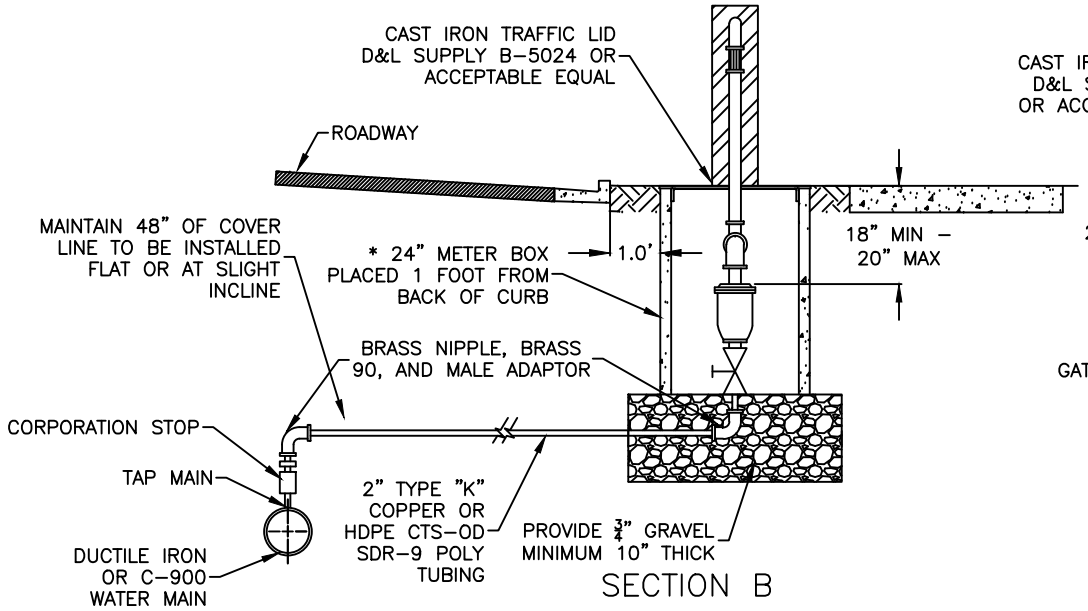

SECTION B

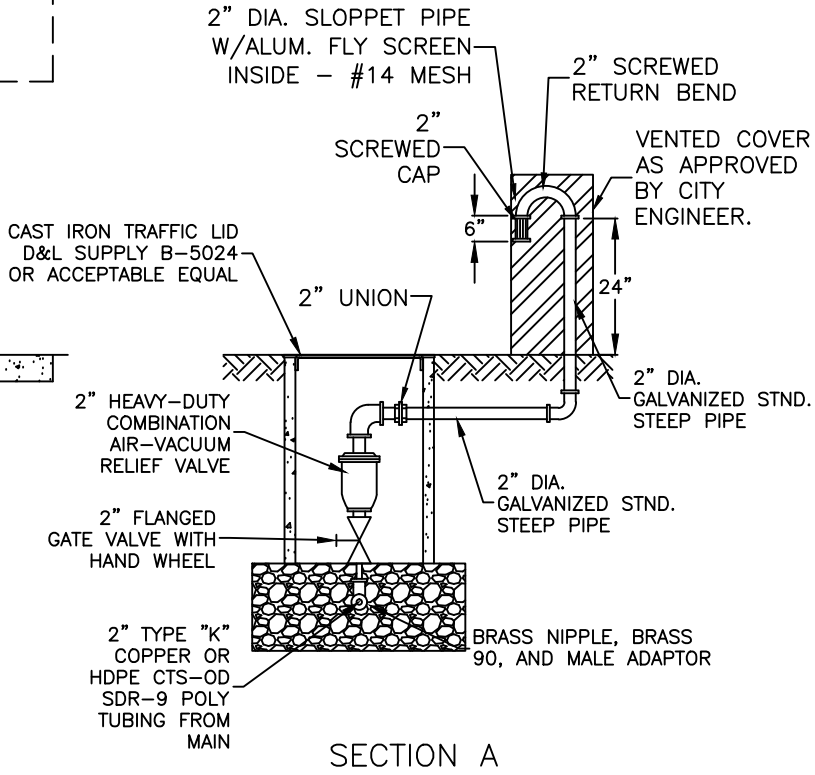

SECTION A

NOTE: TRACING WIRE SHALL TERMINATE IN METER BOX

DRAWN BY SJ	Layton City	STANDARD DRAWING
SCALE NONE		AIR–VAC PARK STRIP
DATE 5/08		ST–WL–17
REVISIONS		

FIRE HYDRANT INSTALLATION

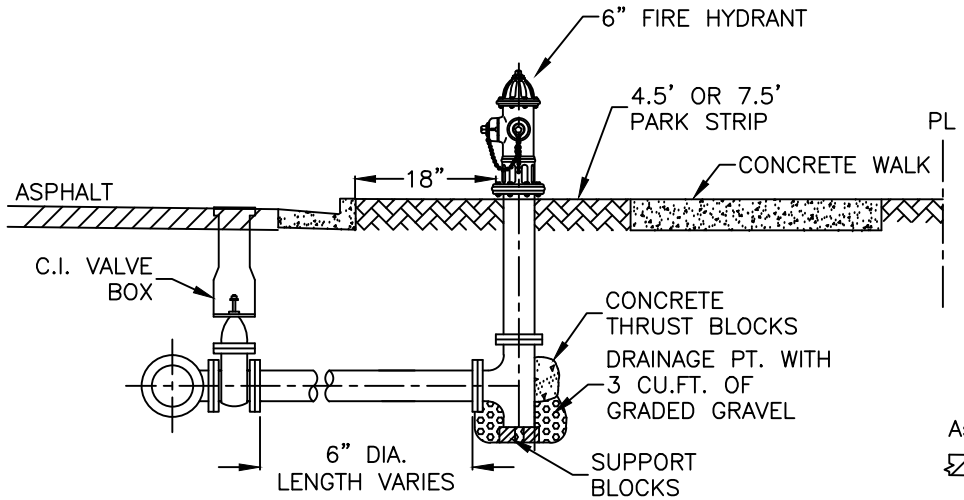

SECTION VIEW – HYDRANT IN PARK STRIP

NOTE: USE CLOW MEDALLION FIRE HYDRANT OR MUELLER SUPER CENTURION 200 FIRE HYDRANT, OR ACCEPTABLE EQUAL.

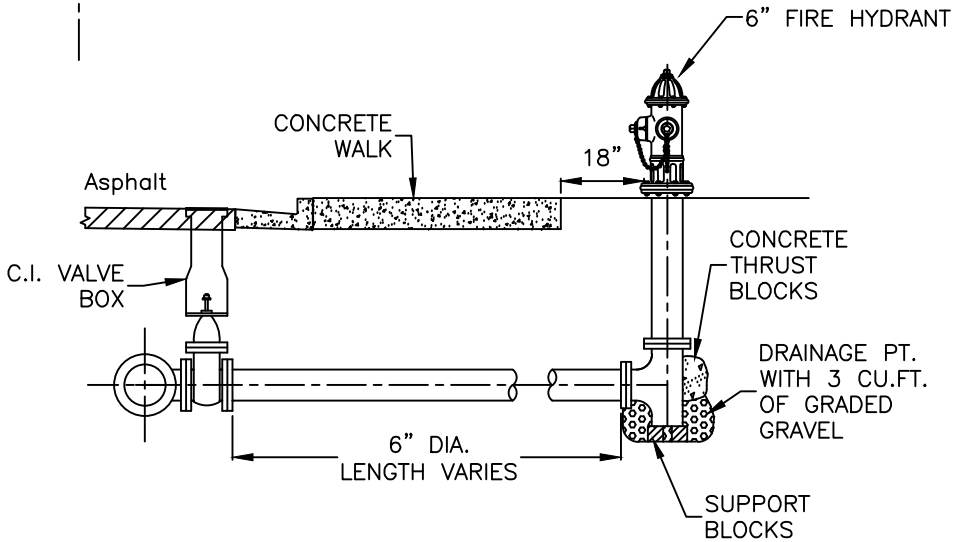

SECTION VIEW – HYDRANT BEHIND ABUTTING SIDEWALK

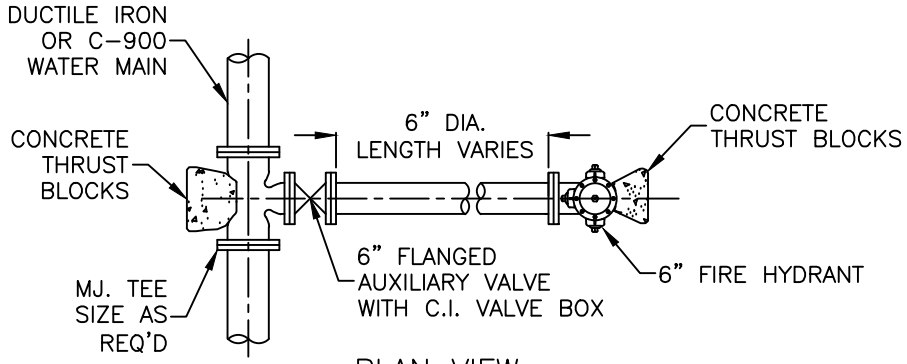

PLAN VIEW

DRAWN BY DHR	Layton City	STANDARD DRAWING FH-DET2
SCALE NONE		
DATE 1/98		ST-WL-18
REVISIONS		

FLUSHING HYDRANT

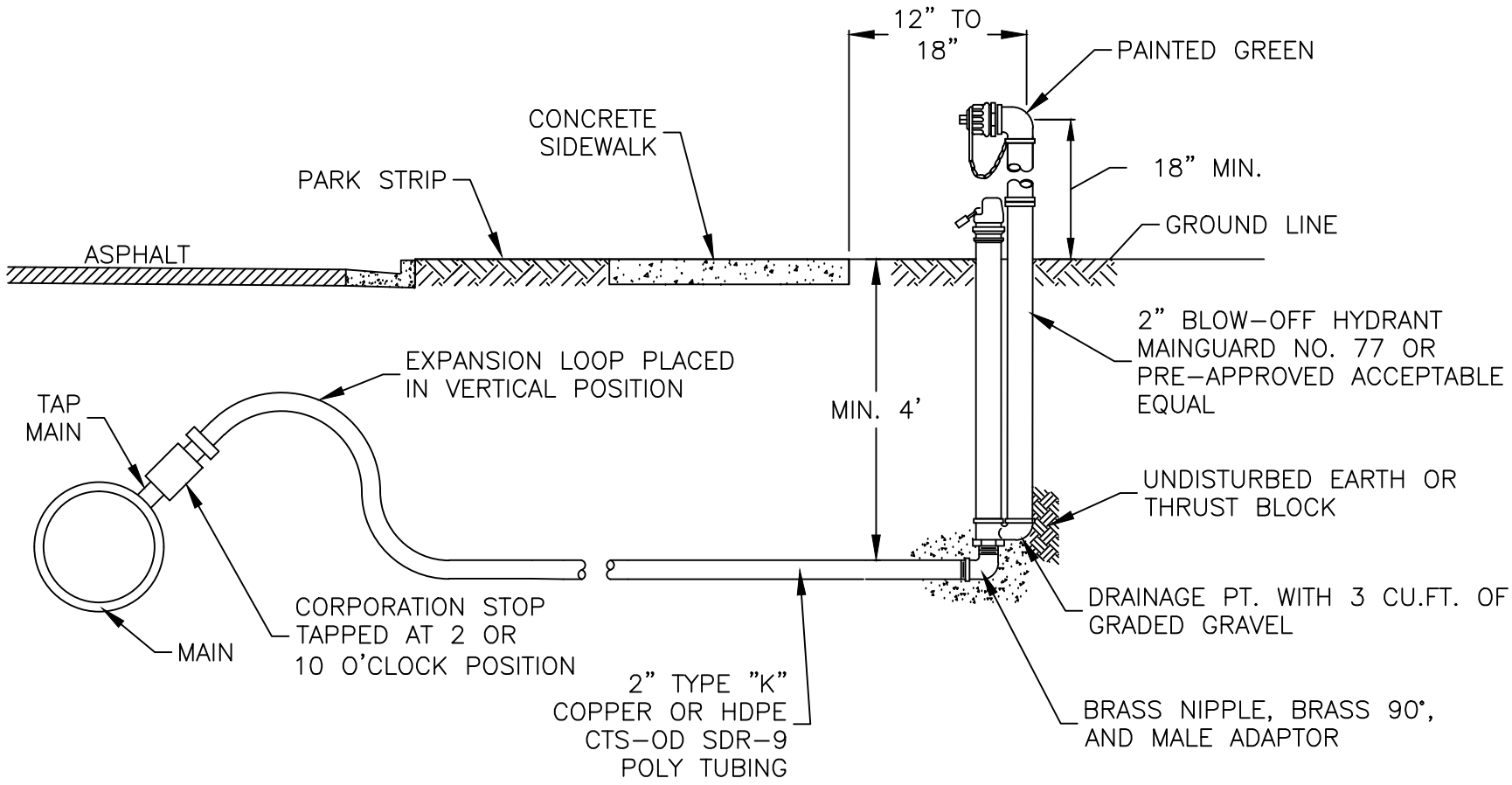

NOTES:

1. FLUSHING HYDRANTS MAY BE USED IN LOCATIONS PRE-APPROVED BY CITY ENGINEER.
2. TRACING WIRE SHALL TERMINATE AT FLUSHING HYDRANT SHUTOFF VALVE.

DRAWN BY SJ	Layton City	STANDARD DRAWING FLUSHING HYDRANT
SCALE NONE		
DATE 10/11		ST-WL-19
REVISIONS		

MINIMUM CLEARANCE AROUND A FIRE HYDRANT

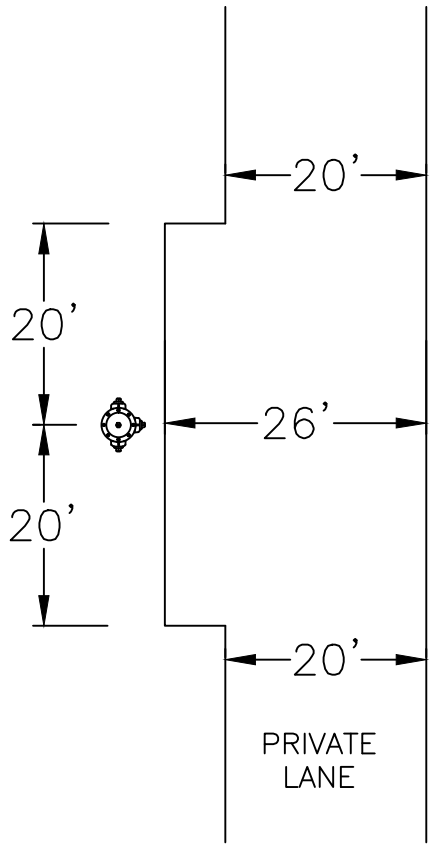

FOR A PRIVATE LANE SERVING ONE OR TWO DWELLINGS AS OUTLINED IN MUNICIPAL CODE 18.50.060

26 FOOT WIDE DRIVABLE SURFACE FOR 20 FEET ON EACH SIDE OF THE HYDRANT

DRAWN BY DHR	Layton City	STANDARD DRAWING
SCALE NONE		FH–CLEARANCE
DATE 4/10		ST–WL–20
REVISIONS		

STANDARD PLANS

FOR SANITARY SEWER SYSTEMS

APRIL 2016

James Woodruff, City Engineer
Shannon Hansen, Assistant City Engineer – Development
Stephen Jackson, Assistant City Engineer – Capital Projects
Staff Engineers: Ryan Bankhead, Ashley Thoman, Mark Stenquist, Stacy Majewski, Amy Bean

SANITARY SEWER DRAWINGS INDEX

DETAIL NAME	ABBREV.	PAGE #
Standard Manhole	STRD MH	ST-SS-01
Standard Connection to Existing Manhole	MH-EX-CONN	ST-SS-02
Drop Manhole w/ Manhole on Outside Sweep	DROPMH2MH45°	ST-SS-03
Manhole Cover	SSMH-LID	ST-SS-04
Sanitary Sewer Service Connection	SSCONN	ST-SS-05
Manhole and Valve Box Marker	MHMARKER	ST-SS-06

STANDARD MANHOLE

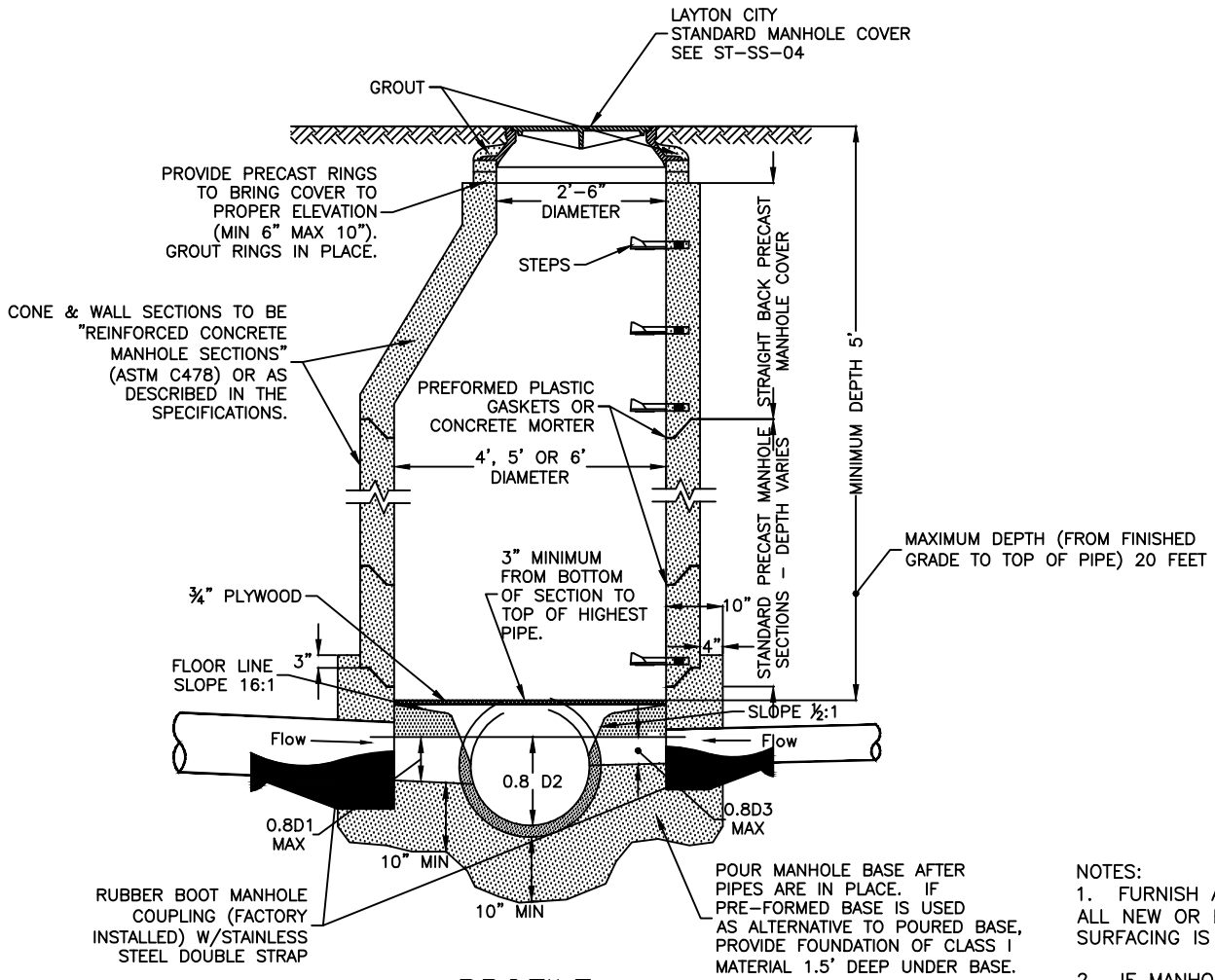

PROFILE

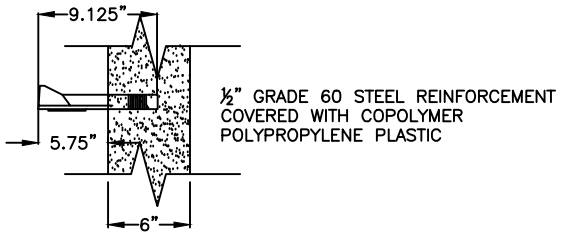

STEP DETAIL

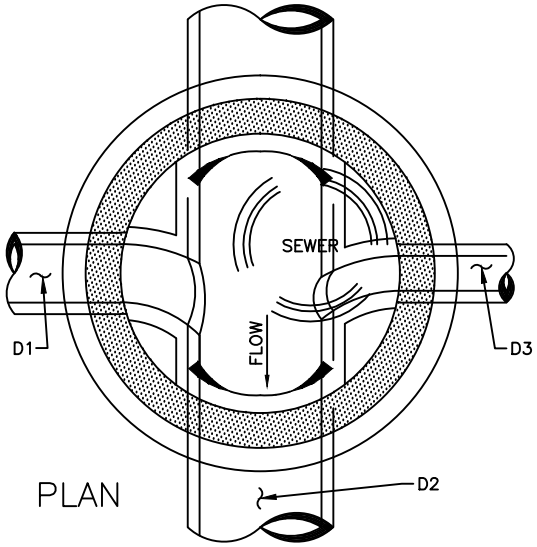

PLAN

NOTES:

1. FURNISH AND INSTALL 3/4" PLYWOOD FALSE BOTTOM COVER IN ALL NEW OR EXISTING MANHOLES AROUND WHICH GRADING OR SURFACING IS BEING PERFORMED.

2. IF MANHOLE IS TO BE POURED IN PLACE FOLLOW SAME PATTERN AS SHOWN EXCEPT USE 8" MIN. WALL THICKNESS.

3. PROVIDE STUBS WHERE SHOWN ON THE PLAN DRAWINGS.

4. MANHOLES MAY BE 4', 5', OR 6' AS SHOWN ON THE PLAN DRAWINGS.

5. PROVIDE FLEXIBLE JOINTS IN PIPELINES, 18" FROM OUTSIDE FACE OF MANHOLE.

6. AFTER ALL GRADING AROUND MANHOLE HAS BEEN COMPLETED AND FINAL SURFACING IS IN PLACE, REMOVE DEBRIS AND TEMPORARY FALSE BOTTOM COVER.

DRAWN BY DHR	Layton City	STANDARD DRAWING STRD-MH
SCALE NONE		
DATE 3/96		ST-SS-01
REVISIONS		

STANDARD CONNECTION TO EXISTING MANHOLE

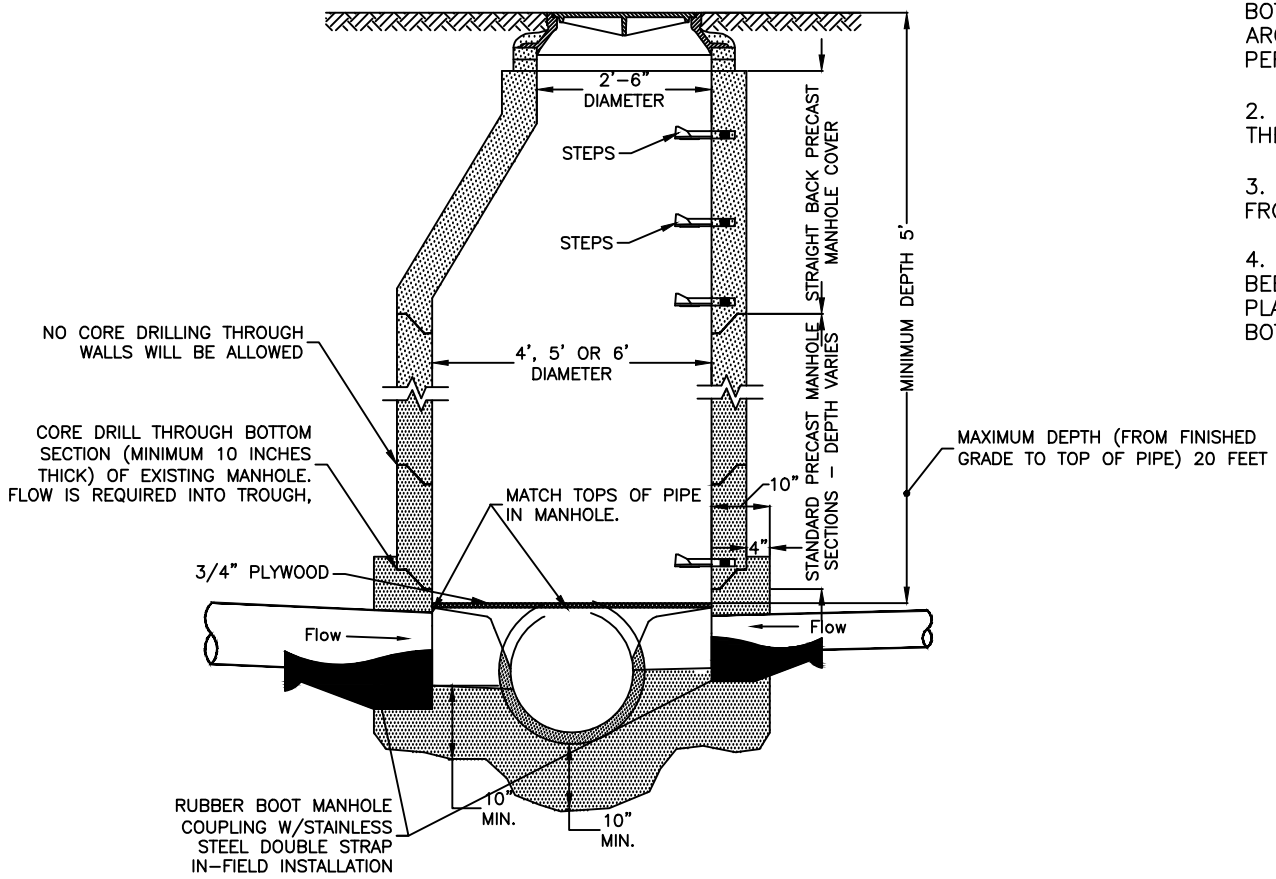

SECTION

NOTES:

1. FURNISH AND INSTALL 3/4" PLYWOOD FALSE BOTTOM COVER IN ALL NEW OR EXISTING MANHOLES AROUND WHICH GRADING OR SURFACING IS BEING PERFORMED.

2. MANHOLES MAY BE 4', 5', OR 6' AS SHOWN ON THE PLAN DRAWING.

3. PROVIDE FLEXIBLE JOINTS IN PIPELINES, 18" FROM OUTSIDE FACE OF MANHOLE.

4. AFTER ALL GRADING AROUND MANHOLE HAS BEEN COMPLETED AND FINAL SURFACING IS IN PLACE, REMOVE DEBRIS AND TEMPORARY FALSE BOTTOM COVER.

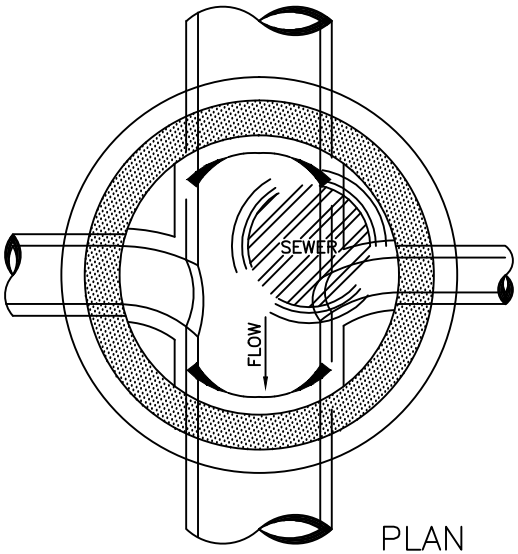

PLAN

DRAWN BY DHR	Layton City	STANDARD DRAWING MH-EX-CONN
SCALE NONE		
DATE 3/96		ST-SS-02
REVISIONS		

DROP MANHOLE
WITH MANHOLE ON OUTSIDE
DROP WITH 45° ON DROP

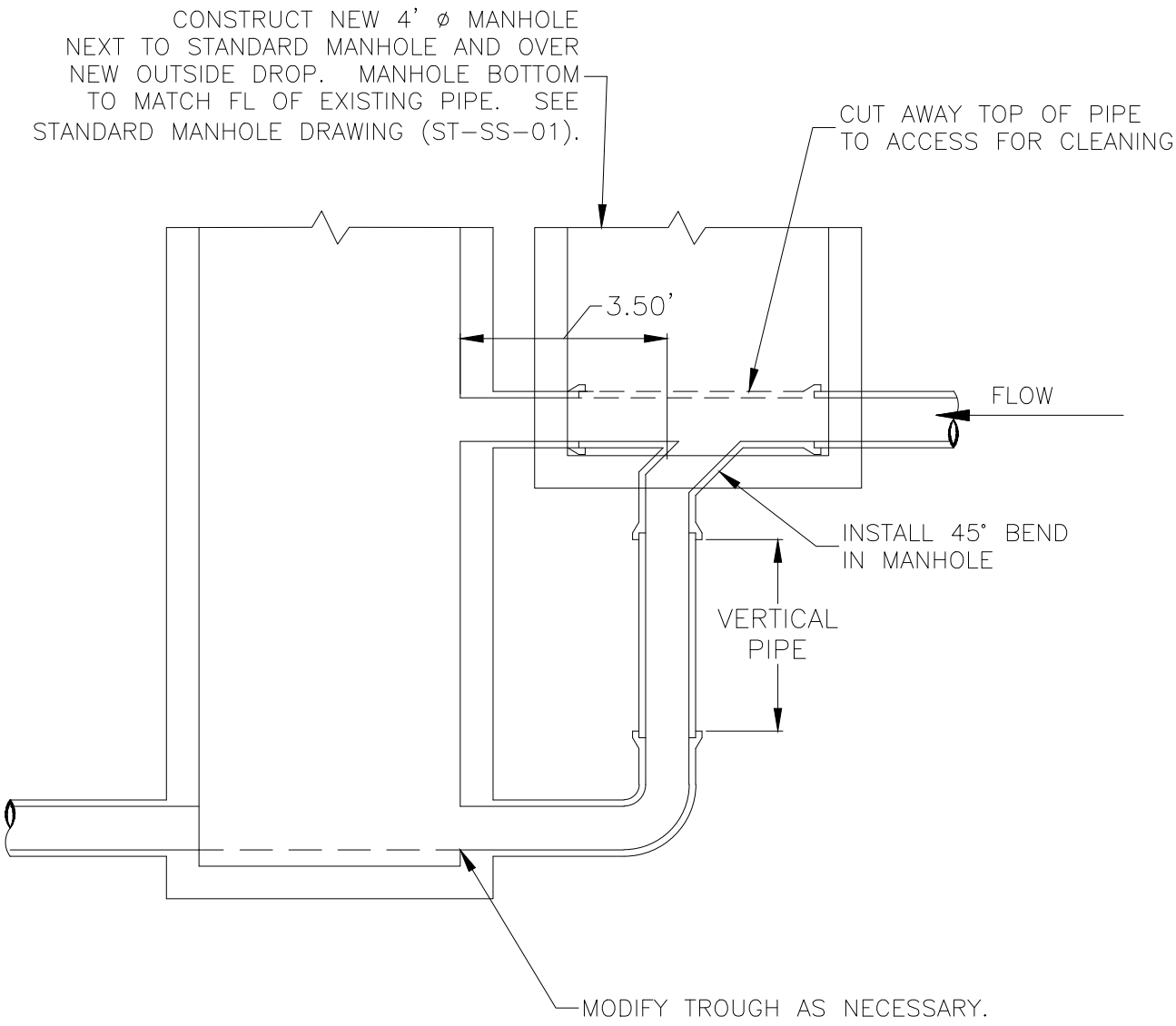

SEE STANDARD MANHOLE DRAWINGS ST-SS-01 AND ST-SS-02 FOR MANHOLE DIMENSIONS AND DETAILS.

DRAWN BY SH	Layton City	STANDARD DRAWING
SCALE NONE		DROP MH 2 MH 45°
DATE 9/97		ST-SS-03
REVISIONS		

MANHOLE COVER

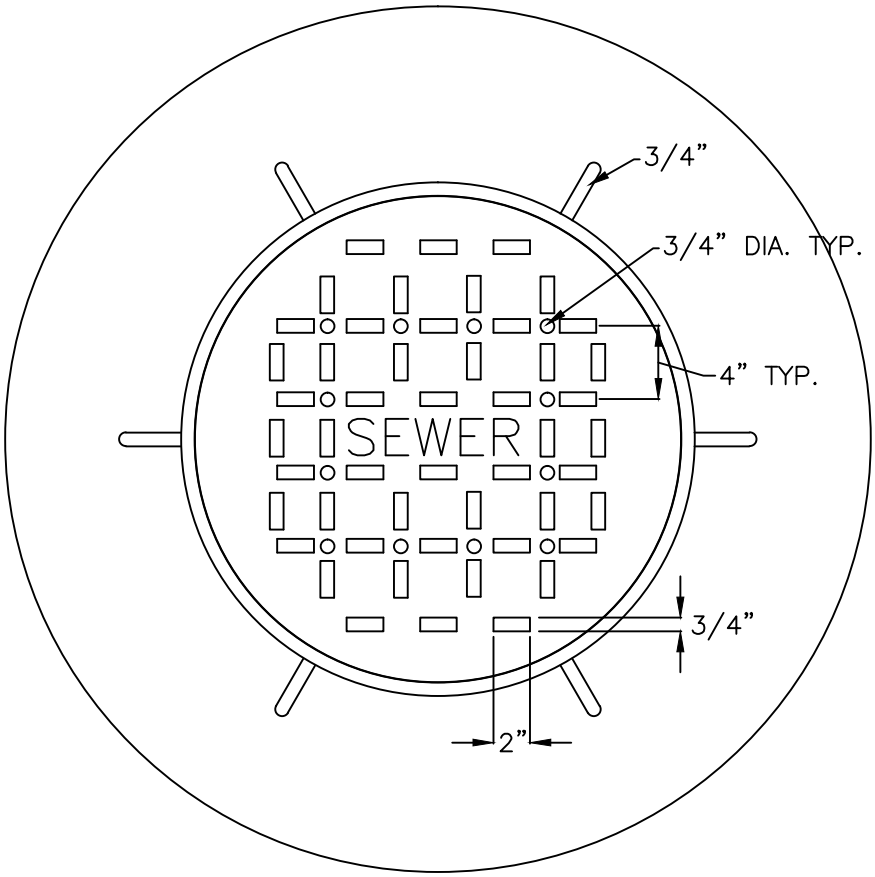

PLAN RING & COVER

STANDARD MANHOLE FRAME AND COVER EQUAL TO D & L SUPPLY A–1180 MANHOLE RING & COVER (VENTED).

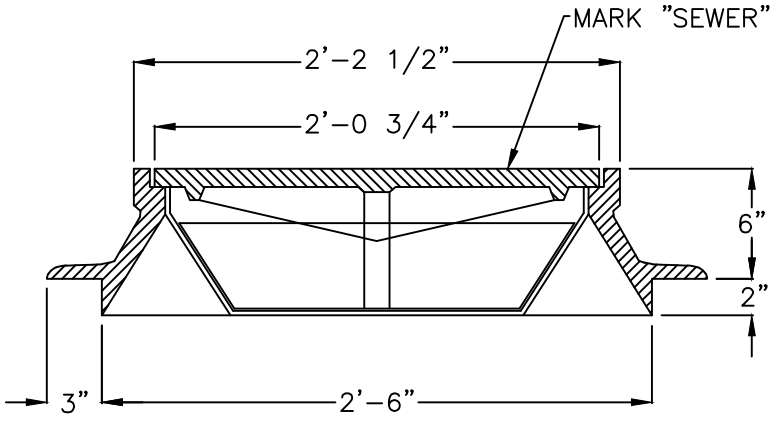

SECTION

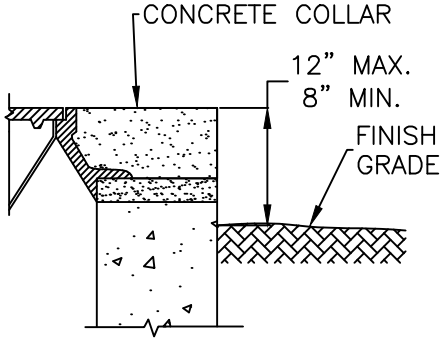

DETAIL
UNIMPROVED AREAS

NOTE: CONTRACTOR SHALL POUR A CONCRETE COLLAR (MIN. 12") AROUND THE CAST IRON RING, EVEN WHEN THE MANHOLE IS LOCATED IN AN UNIMPROVED LOCATION.

DRAWN BY DHR	Layton City	STANDARD DRAWING
SCALE NONE		SSMH–LID
DATE 9/93		ST–SS–04
REVISIONS		

SANITARY SEWER SERVICE CONNECTION

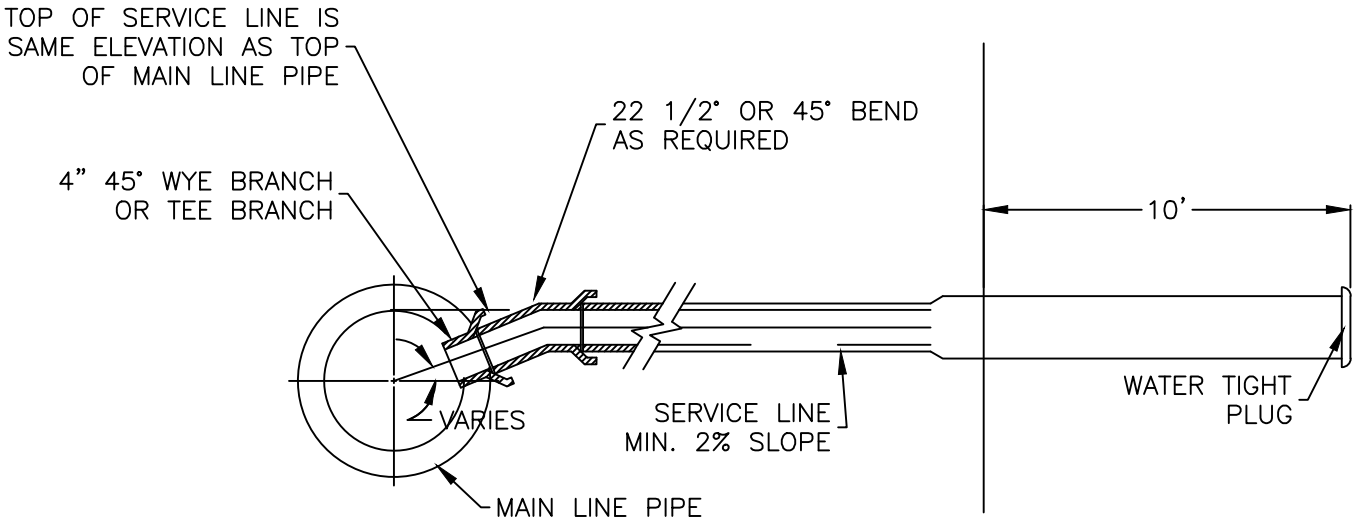

SECTION

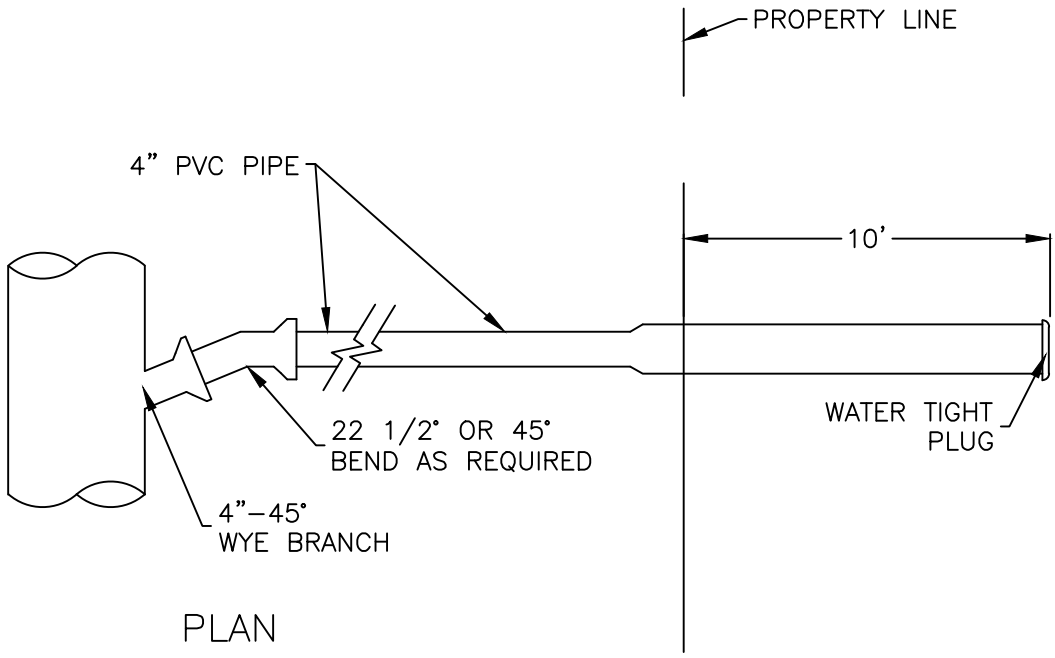

PLAN

DRAWN BY DHR	Layton City	STANDARD DRAWING SS–CON
SCALE NONE		
DATE 9/99		
REVISIONS 3/12		ST–SS–05

MANHOLE & VALVE BOX MARKER

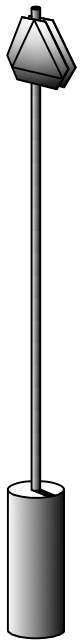

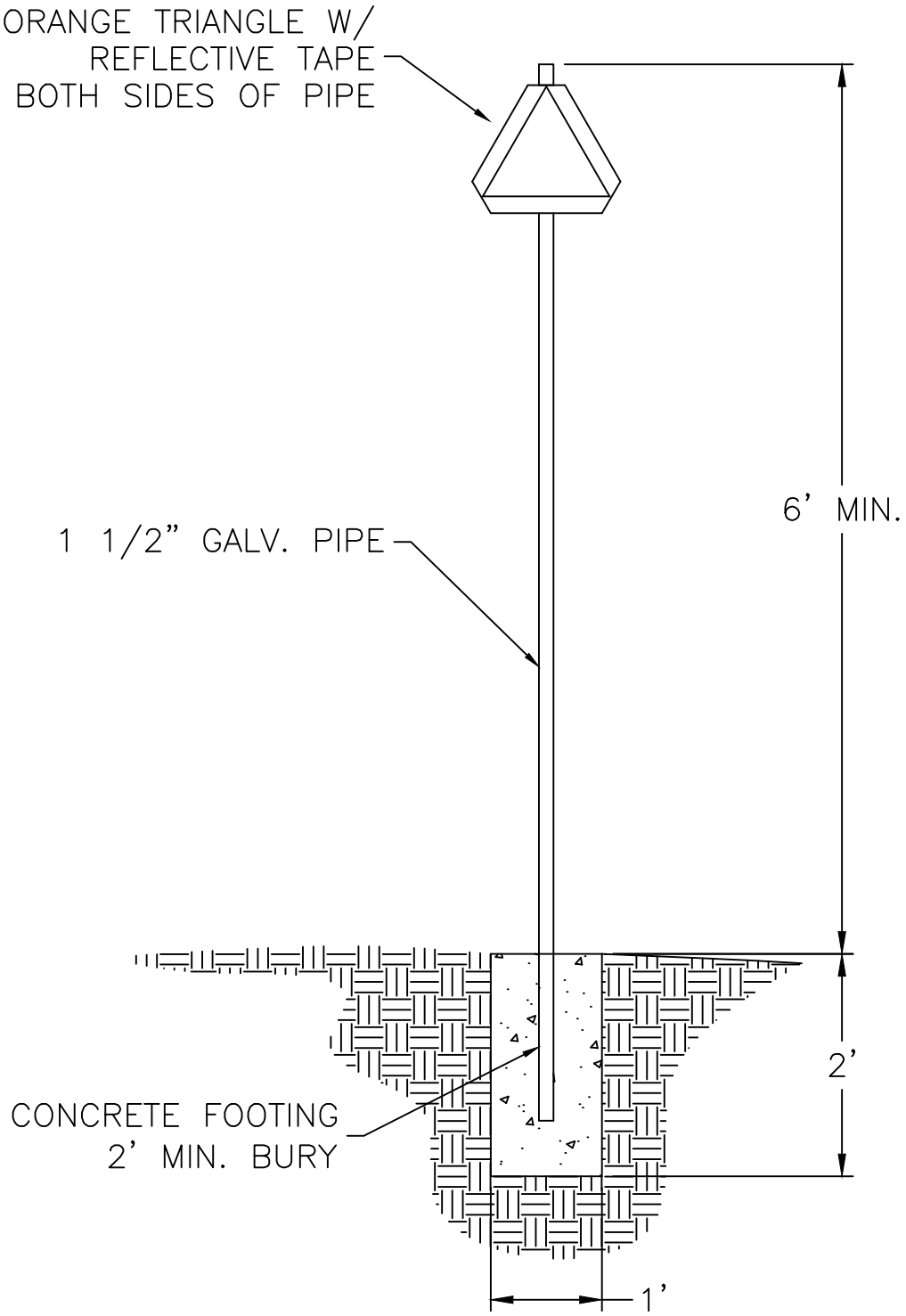

DRAWN BY RB	Layton City	STANDARD DRAWING MH MARKER
SCALE NONE		
DATE 3/10		ST-SS-06
REVISIONS 3/12		

STANDARD PLANS
FOR STORM DRAIN

APRIL 2016

James Woodruff, City Engineer
Shannon Hansen, Assistant City Engineer – Development
Stephen Jackson, Assistant City Engineer – Capital Projects
Staff Engineers: Ryan Bankhead, Ashley Thoman, Mark Stenquist, Stacy Majewski, Amy Bean

STORM DRAIN DRAWINGS INDEX

DETAIL NAME	ABBREV.	PAGE #
Location of Storm Drain Pipe	SD-LOC	ST-SD-01
Inlet Box – 15” Pipe	15” IB	ST-SD-02
Double Inlet Box Curb & Gutter Location	DIB	ST-SD-03
Gutter Inlet Box	GTRINLET	ST-SD-04
Manhole Inlet	MH-INLET	ST-SD-05
5’ X 4’ Inlet Box	5X4INLET	ST-SD-06
Bicycle Safe Inlet Grate	BIKEGRATE	ST-SD-07
Cleanout Box – 12”, 15”, or 18” Pipe	12”-18” CO BOX	ST-SD-08
Cleanout Box – 21” – 30” Pipe	21”-30” CO BOX	ST-SD-09
Cleanout Box – 36” – 42” Pipe	36”-42” CO BOX	ST-SD-10
Cleanout Box – 48” Pipe	48” CO BOX	ST-SD-11
Cleanout Box with Manhole Lid	CO-MH-LID	ST-SD-12
Combination Cleanout Box/Inlet Box	COMBO	ST-SD-13
Combination Cleanout Box/Double Inlet Box	COMBO-DI	ST-SD-14
Irrigation Diversion Box	IRR-CO	ST-SD-15
Detention Pond Inlet/Outlet Structure	I/O STRUCTURE	ST-SD-16
Storm Drain & Land Drain Manhole	SDMH	ST-SD-17
Manhole Cover	SDMH-LID	ST-SD-18
Footing and Foundation Subdrain	FOOTING	ST-SD-19
Pond Berm Cross Section	POND BERM	ST-SD-20
Storm Drain Detention Basin Sprinkling System	SDBASIN SPRINKLER	ST-SD-21
Combination Cleanout/Inlet Box in Waterway	COMBO-WWY	ST-SD-22
Inlet Box – 15” Pipe (Stub to IRR Ditch)	IB – DITCH	ST-SD-23
8” Drain Line Installation for Slope Stabilization/Dewatering	8” PERF	ST-SD-24

LOCATION OF STORM DRAIN PIPE

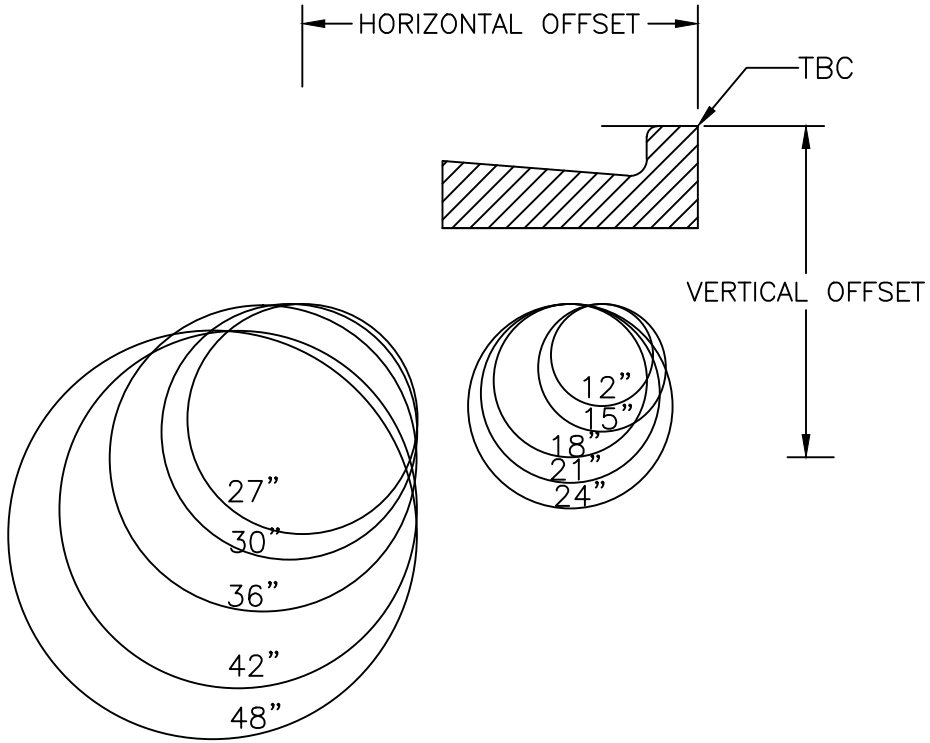

PIPE DIAMETER	HORIZONTAL OFFSET FROM TBC TO CL OF PIPE (FT.)	MIN VERTICAL OFFSET FROM TBC (FT.) TO FL OF PIPE
12”	0.94	2.75
15”	0.94	3.00
18”	1.25	3.25
21”	1.25	3.50
24”	1.25	3.75
27”	3.87	4.00
30”	4.00	4.25
36”	4.25	4.75
42”	4.50	5.50
48”	4.75	6.00

DRAWN BY DHR	Layton City	STANDARD DRAWING SD–LOC
SCALE NONE		
DATE 3/96		ST–SD–01
REVISIONS 5/12		

INLET BOX – 15" PIPE

CURB & GUTTER PLAN

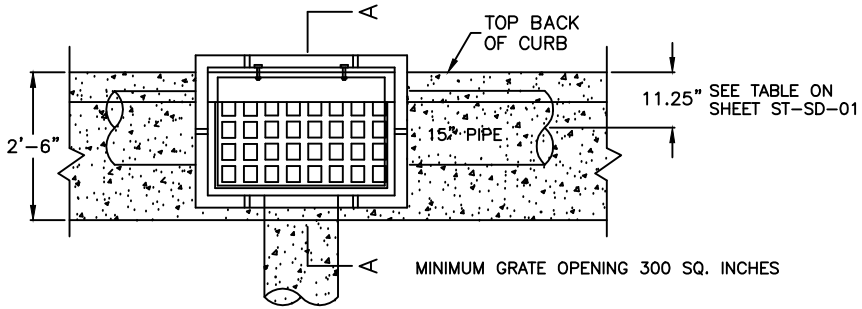

WATERWAY PLAN

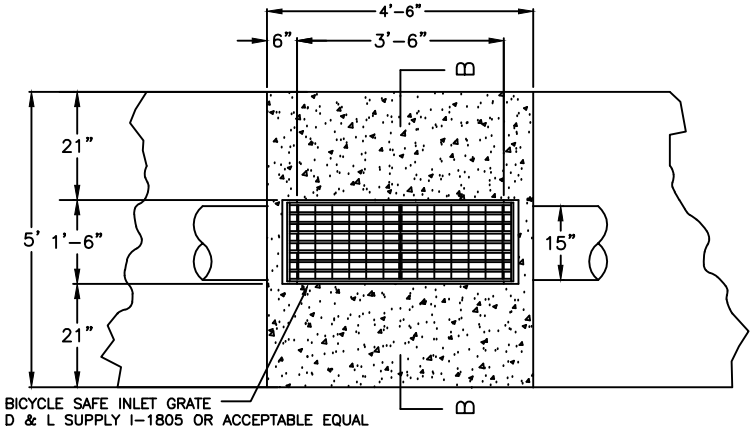

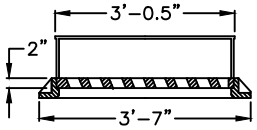

INLET FRAME AND GRATE WITH ADJUSTABLE CURB BOX (OLYMPIC FOUNDRY 1-3517 OR ACCEPTABLE EQUAL)

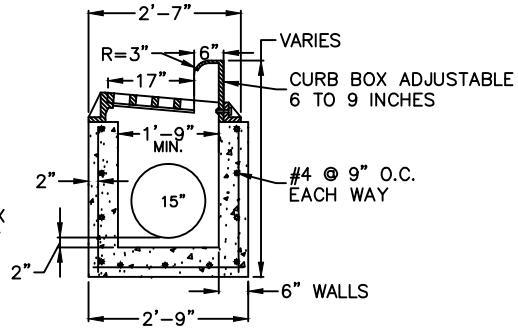

SECTION A

*INTERIOR BOX SIZE 1'-9" X 36"

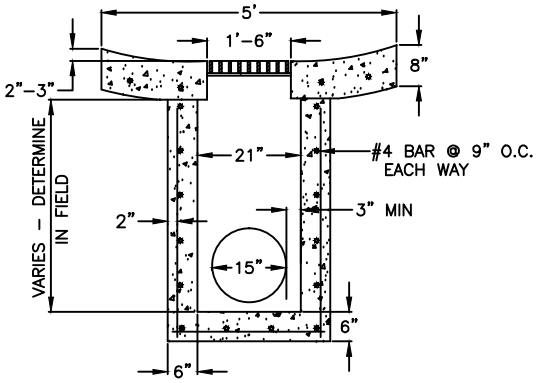

SECTION B

NOTES:

1. ALL REINFORCEMENT SHALL BE #4 DEFORMED STEEL, GRADE 60. KSI PER APWA 03 20 00.

2. ALL REINFORCEMENT SHALL BE PLACED AT 9" O.C. EACH WAY IN THE FLOOR AND THE WALLS.

3. THE ADJUSTABLE CURB BOX INLET GRATE SHALL BE BICYCLE SAFE (OLYMPIC FOUNDRY I-3517 OR ACCEPTABLE EQUAL)

3A. THE WATERWAY INLET GRATE SHALL BE BICYCLE SAFE AND SHALL BE SET ON 3"x3"x1/2" ANGLE IRON SUPPORTS CAST IN EACH END OF THE BOX (D&L SUPPLY I-1805 OR ACCEPTABLE EQUAL) (SEE LEDGE DETAIL).

4. CONCRETE SHALL BE CLASS 4,000 PER APWA 03 30 04.

5. ALL PIPES IN THE BOX SHALL BE CUT WITH THE INTERIOR OF THE BOX AND GROUTED SMOOTH.

6. REBAR SHALL HAVE 2" CLEAR ON EARTH SIDE OF THE STRUCTURE.

7. IF PRECAST BOX HAS BEEN ALLOWED, A CONCRETE COLLAR SHALL BE POURED AT ALL CONNECTIONS.

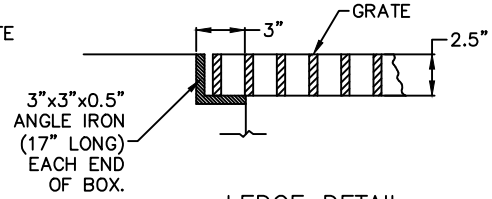

LEDGE DETAIL

WATERWAY INLET GRATE

DRAWN BY DHR	Layton City	STANDARD DRAWING 15" IB
SCALE NONE		
DATE 3/96		ST-SD-02
REVISIONS 3/03		

DOUBLE INLET BOX
CURB & GUTTER LOCATION

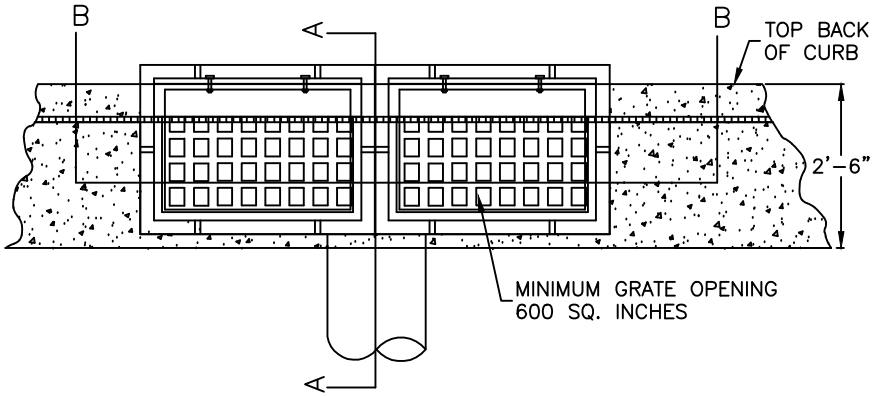

PLAN – DOUBLE INLET

NOTES:

1. ALL REINFORCEMENT SHALL BE #4 DEFORMED STEEL, GRADE 60. KSI PER APWA 03 20 00.

2. ALL REINFORCEMENT SHALL BE PLACED AT 9" O.C. EACH WAY IN THE FLOOR AND THE WALLS.

3. THE ADJUSTABLE CURB BOX INLET GRATE SHALL BE BICYCLE SAFE (OLYMPIC FOUNDRY I–3517 OR ACCEPTABLE EQUAL).

4. CONCRETE SHALL BE CLASS 4,000 PER APWA 03 30 04.

5. ALL PIPES IN THE BOX SHALL BE CUT AND GROUTED SMOOTH.

6. REBAR SHALL HAVE 2" CLEAR ON EARTH SIDE OF STRUCTURE.

7. IF PRECAST BOX ALLOWED, A CONCRETE COLLAR SHALL BE POURED AT ALL CONNECTIONS.

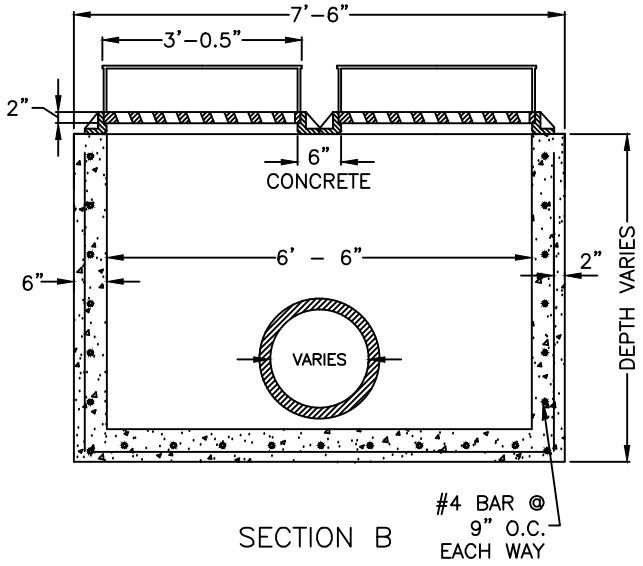

SECTION B

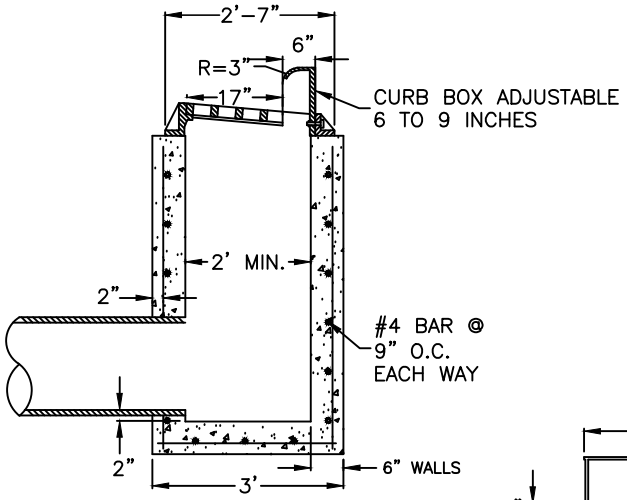

SECTION A

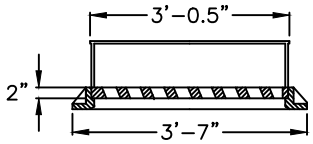

INLET FRAME AND GRATE
WITH ADJUSTABLE CURB BOX
(OLYMPIC FOUNDRY 1–3517
OR ACCEPTABLE EQUAL)

DRAWN BY DHR	Layton City	STANDARD DRAWING DIB
SCALE NONE		
DATE 3/96		ST–ST–03
REVISIONS 10/97		

GUTTER INLET BOX

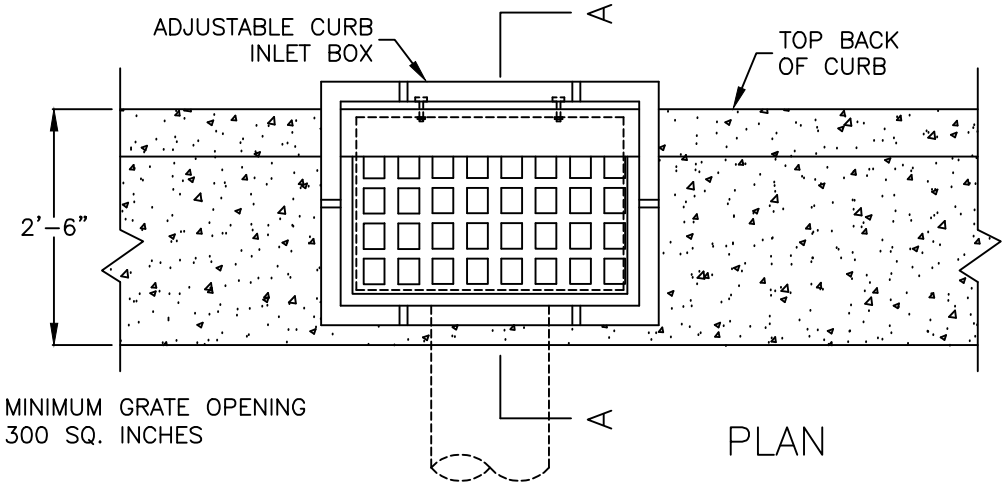

PLAN

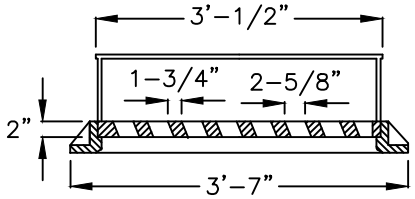

INLET FRAME AND GRATE
WITH ADJUSTABLE CURB BOX
(OLYMPIC FOUNDRY I-3517
OR ACCEPTABLE EQUAL)

*INTERIOR BOX SIZE 1'-8½" X 36"
(PIPES 30 INCHES AND SMALLER)

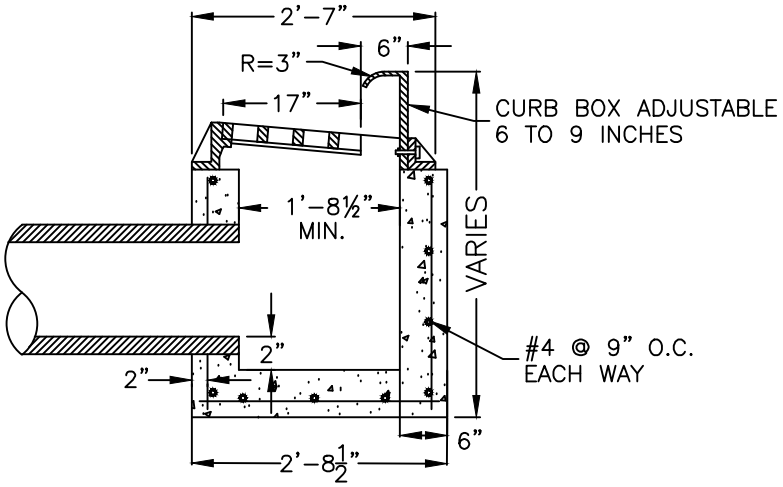

SECTION A

NOTES:

1. ALL REINFORCEMENT SHALL BE #4 DEFORMED STEEL, GRADE 60.KSI PER APWA 03 20 00.

2. ALL REINFORCEMENT SHALL BE PLACED AT 9" O.C. EACH WAY IN THE FLOOR AND THE WALLS.

3. THE ADJUSTABLE CURB BOX INLET GRATE SHALL BE BICYCLE SAFE (OLYMPIC FOUNDRY I-3517 OR ACCEPTABLE EQUAL),

4. CONCRETE SHALL BE CLASS 4,000 PER APWA 03 30 04.

5. ALL PIPES IN THE BOX SHALL BE CUT WITH THE INTERIOR OF THE BOX AND GROUTED SMOOTH.

6. REBAR SHALL HAVE 2" CLEAR ON EARTH SIDE OF THE STRUCTURE.

7. IF PRECAST BOX HAS BEEN ALLOWED, A CONCRETE COLLAR SHALL BE POURED AT ALL CONNECTIONS.

DRAWN BY DHR	Layton City	STANDARD DRAWING GTRINLET
SCALE NONE		
DATE 3/96		
REVISIONS 10/97		ST-SD-04

MANHOLE INLET

WITH INLET GRATE COVER
CURB & GUTTER LOCATION

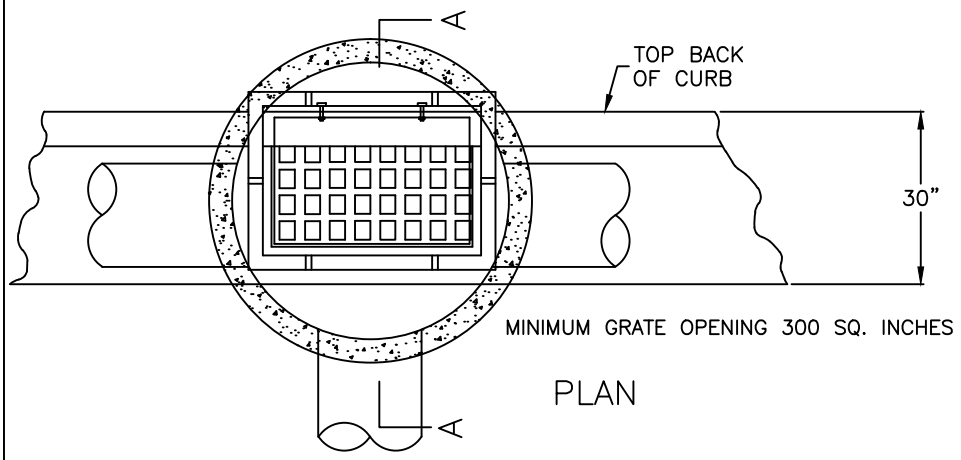

PLAN

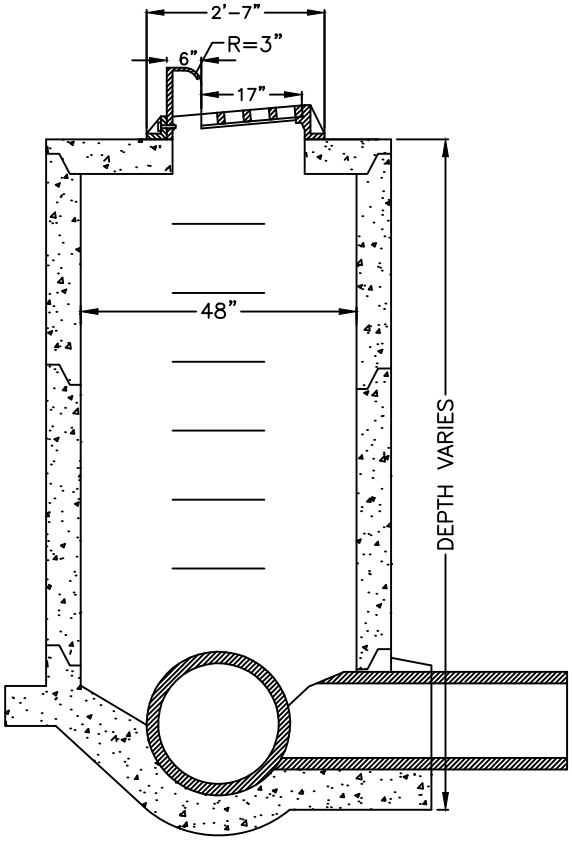

SECTION A

SEE DRAWING "ST-SD-17" FOR
MANHOLE CONSTRUCTION DETAILS

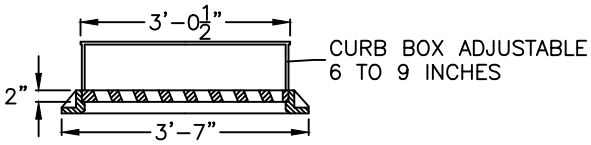

INLET FRAME AND GRATE
WITH ADJUSTABLE CURB BOX
(OLYMPIC FOUNDRY 1-3517
OR ACCEPTABLE EQUAL)

NOTES:

1. ALL REINFORCEMENT SHALL BE #4 DEFORMED STEEL, GRADE 60. KSI PER APWA 03 20 00.

2. ALL REINFORCEMENT SHALL BE PLACED AT 9" O.C. EACH WAY IN THE FLOOR AND THE WALLS.

3. THE ADJUSTABLE CURB BOX INLET GRATE SHALL BE BICYCLE SAFE (OLYMPIC FOUNDRY I-3517 OR ACCEPTABLE EQUAL).

4. CONCRETE SHALL BE CLASS 4,000 PER APWA 03 30 04.

5. ALL PIPES IN THE BOX SHALL BE CUT WITH THE INTERIOR OF THE BOX AND GROUTED SMOOTH.

6. REBAR SHALL HAVE 2" CLEAR ON EARTH SIDE OF THE STRUCTURE.

DRAWN BY DHR	Layton City	STANDARD DRAWING
SCALE NONE		MH-INLET
DATE 3/96		ST-SD-05
REVISIONS 10/97		

5' X 4' INLET BOX

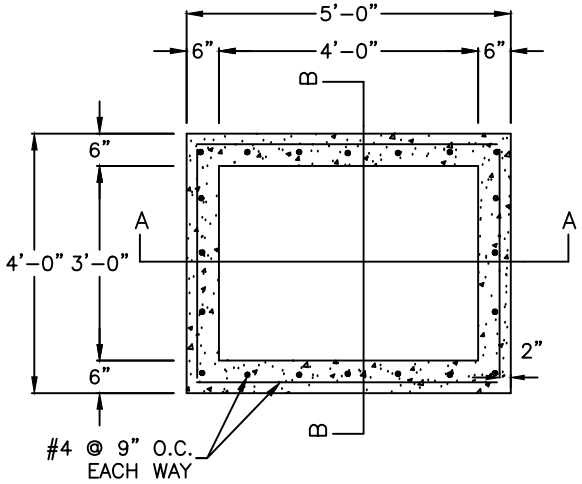

PLAN-INLET BOX

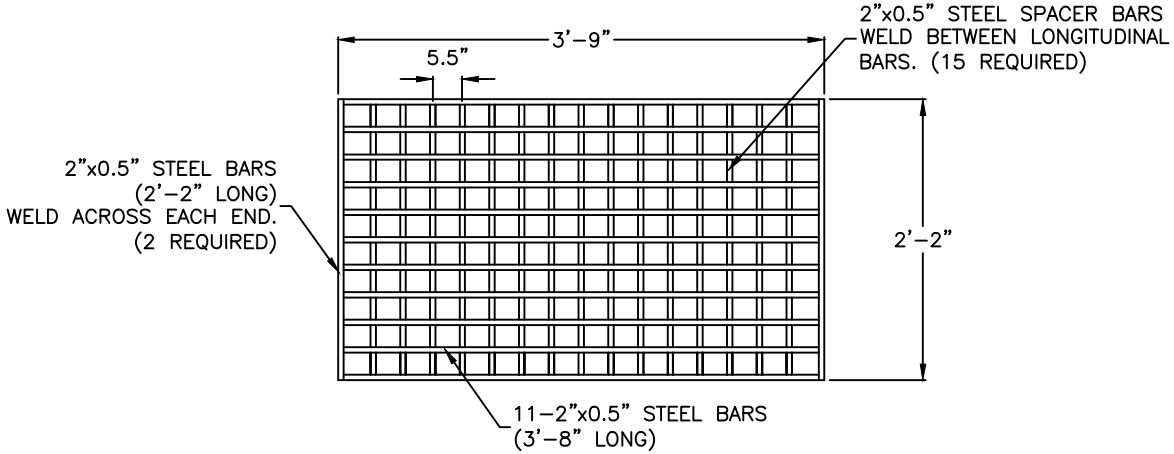

BICYCLE SAFE STEEL GRATING

(NOT TO SCALE)

NOTES:

1. ALL REINFORCEMENT SHALL BE #4 DEFORMED STEEL, GRADE 60 KSI PER APWA 03 20 00.

2. ALL REINFORCEMENT SHALL BE PLACED AT 9" O.C. EACH WAY IN THE FLOOR AND THE WALLS.

3. THE INLET GRATE SHALL BE SET ON 3"x3"x1/2" ANGLE IRON SUPPORTS CAST IN EACH END OF THE BOX.

4. CONCRETE SHALL BE CLASS 4,000 PER APWA 03 30 04.

5. ALL PIPES IN THE BOX SHALL BE CUT WITH THE INTERIOR OF THE BOX AND GROUTED SMOOTH.

6. REBAR SHALL HAVE 2" CLEAR ON EARTH SIDE OF THE STRUCTURE.

7. TO BE USED IN FIELDS OR PARKING LOT AREAS.

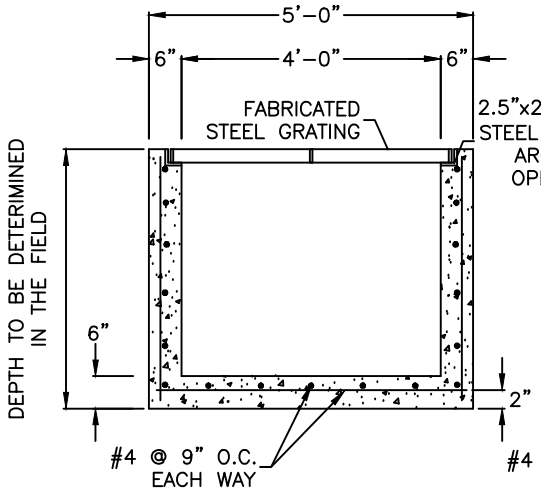

SECTION A

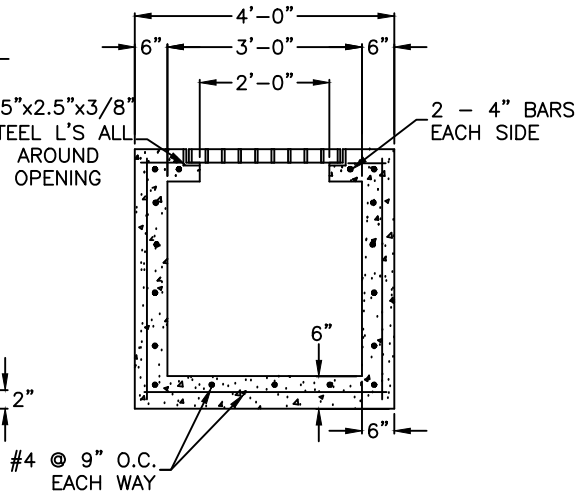

SECTION B

DRAWN BY DHR	Layton City	STANDARD DRAWING 5X4INLET
SCALE NONE		
DATE 11/93		ST-SD-06
REVISIONS		

BICYCLE SAFE INLET GRATE

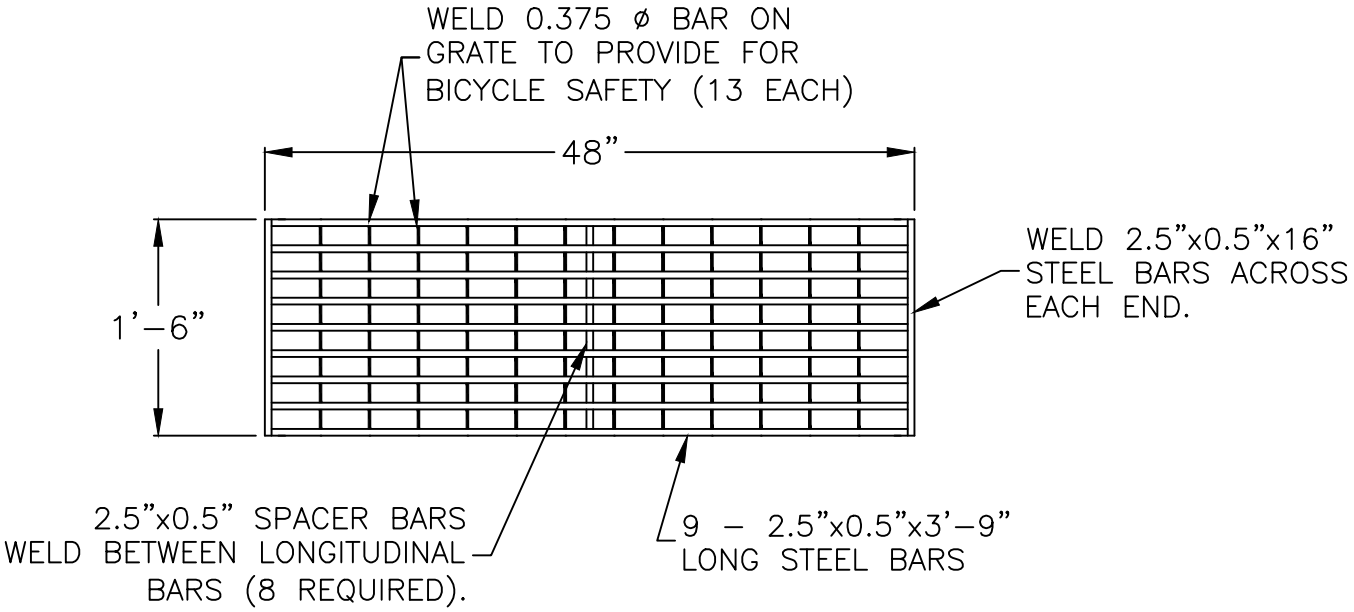

DETAILS – STEEL GRATE

RECTANGULAR FRAME AND GRATE
D&L SUPPLY I–1805 OR
ACCEPTABLE EQUAL

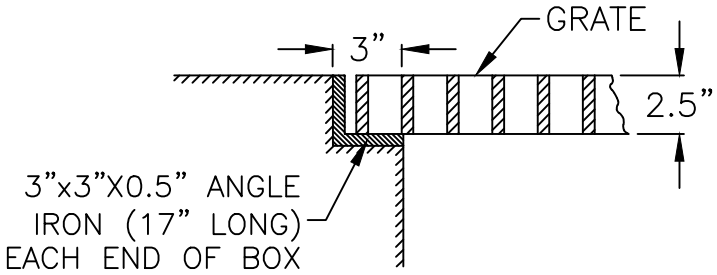

LEDGE DETAIL
WATERWAY INLET GRATE

DRAWN BY DHR	Layton City	STANDARD DRAWING
SCALE NONE		BIKEGRATE
DATE 10/97		ST–SD–07
REVISIONS		

CLEANOUT BOX – 12", 15" OR 18" PIPE

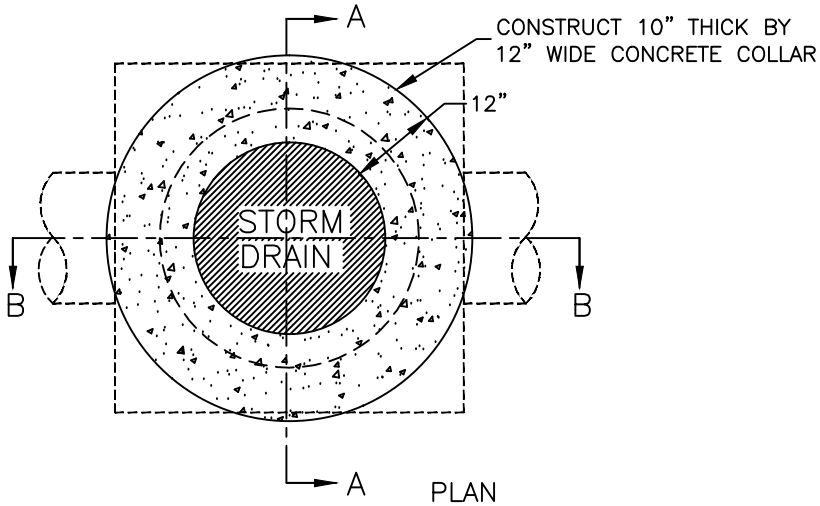

NOTES:

1. ALL REINFORCEMENT SHALL BE #4 DEFORMED STEEL, GRADE 60 KSI PER APWA 03 20 00.

2. ALL REINFORCEMENT SHALL BE PLACED AT 9 INCHES O.C. EACH WAY IN THE FLOOR AND WALLS.

3. THE MANHOLE FRAME AND COVER SHALL BE D & L SUPPLY MODEL A–1181 OR ACCEPTABLE EQUAL.

4. CONCRETE SHALL BE CLASS 4,000 PER APWA 03 30 04.

5. ALL PIPES IN THE BOX SHALL BE CUT FLUSH WITH THE INTERIOR OF THE BOX AND GROUTED SMOOTH.

6. REBAR SHALL HAVE 2" CLEAR ON EARTH SIDE OF STRUCTURE.

7. IF A PRECAST BOX HAS BEEN ALLOWED, A CONCRETE COLLAR SHALL BE POURED AT ALL CONNECTIONS.

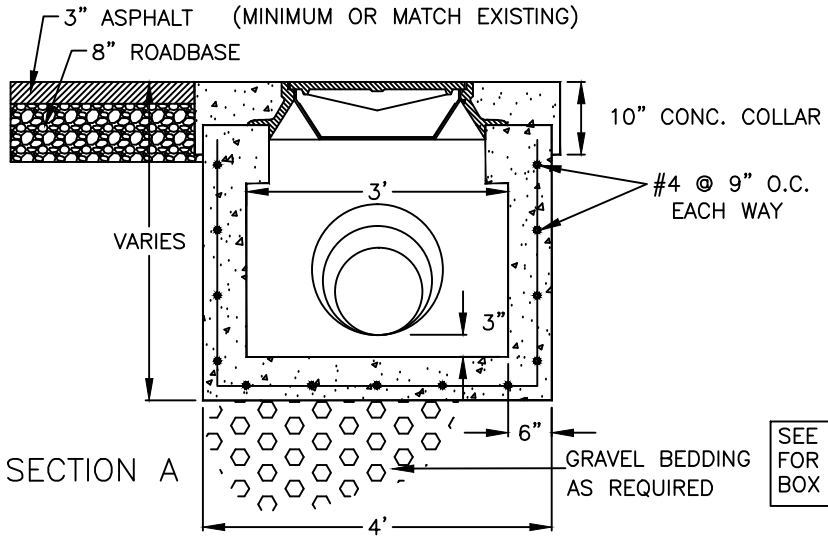

SECTION A

SEE ST–SD–01 STANDARD FOR MINIMUM DEPTH OF BOX FOR CONCRETE PIPE

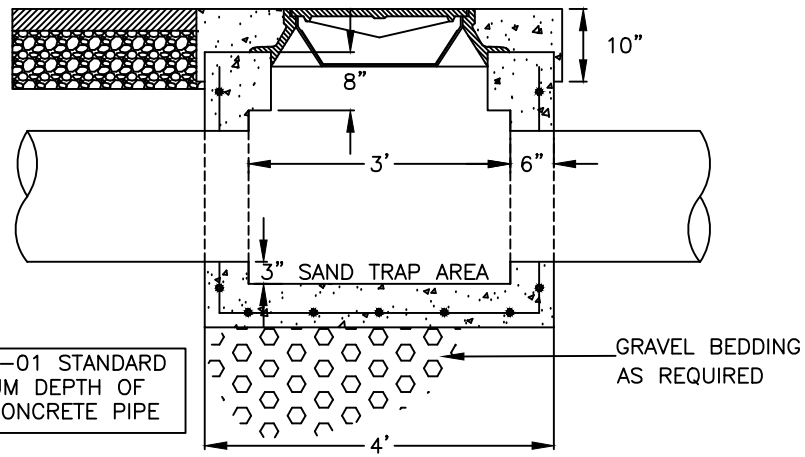

SECTION B

DRAWN BY DHR	Layton City	STANDARD DRAWING 12"–18" CO BOX
SCALE NONE		
DATE 6/05		ST–SD–08
REVISIONS		

CLEANOUT BOX – 21" – 30" PIPE

27" AND 30" PIPE

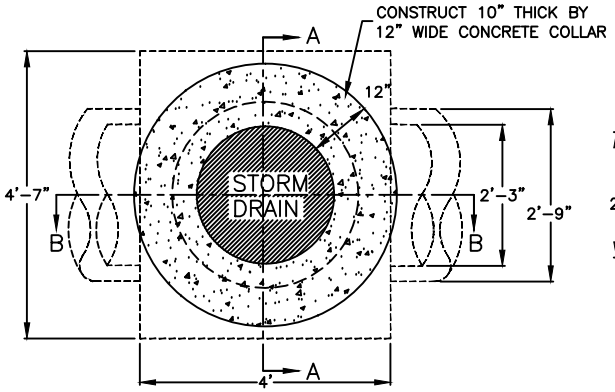

PLAN

21" AND 24" PIPE

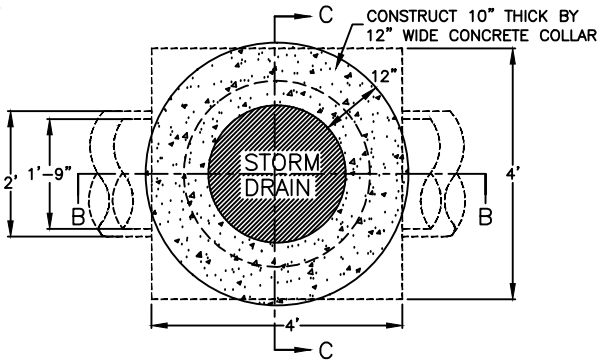

PLAN

NOTES:

1. ALL REINFORCEMENT SHALL BE #4 DEFORMED STEEL, GRADE 60 KSI PER APWA 03 20 00.

2. ALL REINFORCEMENT SHALL BE PLACED AT 9 INCHES O.C. EACH WAY IN THE FLOOR AND WALLS.

3. THE MANHOLE FRAME AND COVER SHALL BE D & L SUPPLY MODEL A–1181 OR ACCEPTABLE EQUAL.

4. CONCRETE SHALL BE CLASS 4,000 PER APWA 03 30 04.

5. ALL PIPES IN THE BOX SHALL BE CUT FLUSH WITH THE INTERIOR OF THE BOX AND GROUTED SMOOTH.

6. REBAR SHALL HAVE 2 INCHES CLEAR ON EARTH SIDE OF STRUCTURE.

7. IF A PRECAST BOX HAS BEEN ALLOWED, A CONCRETE COLLAR SHALL BE POURED AT ALL CONNECTIONS.

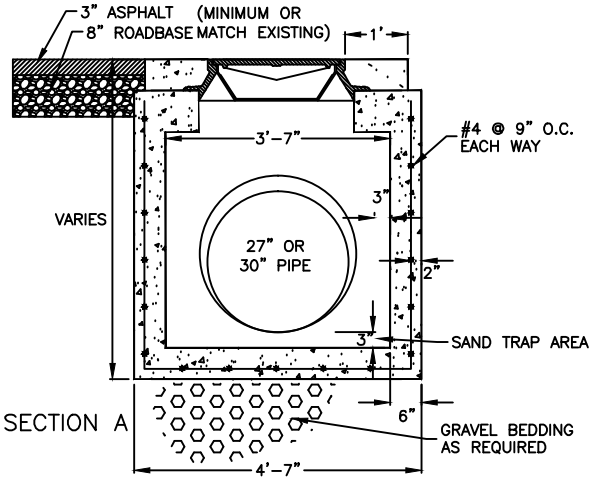

SECTION A

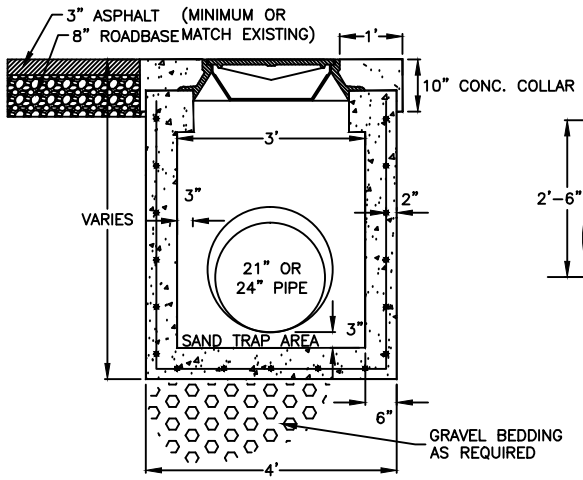

SECTION C

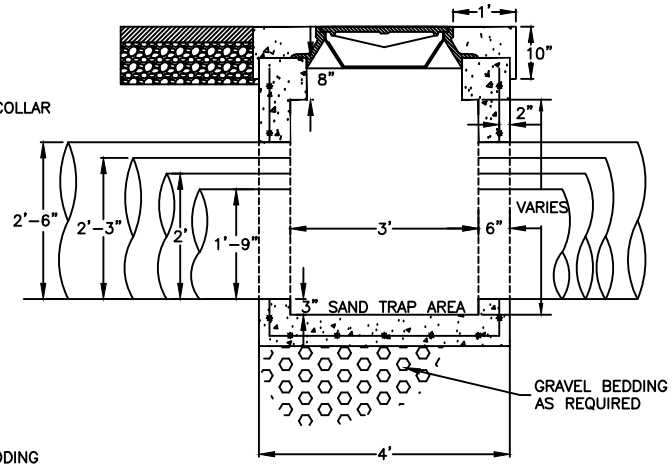

SECTION B

SEE ST–SD–01 STANDARD FOR MINIMUM DEPTH OF BOX FOR CONCRETE PIPE

DRAWN BY DHR	Layton City	STANDARD DRAWING
SCALE NONE		21"–30" CO BOX
DATE 8/05		ST–SD–09
REVISIONS		

CLEANOUT BOX – 36" – 42" PIPE

42" PIPE

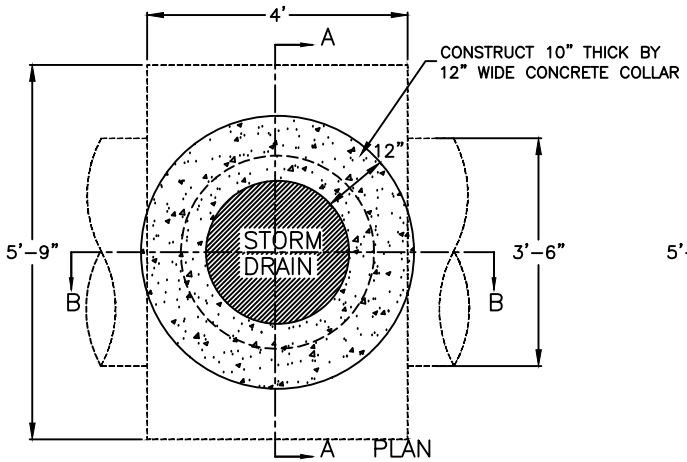

36" PIPE

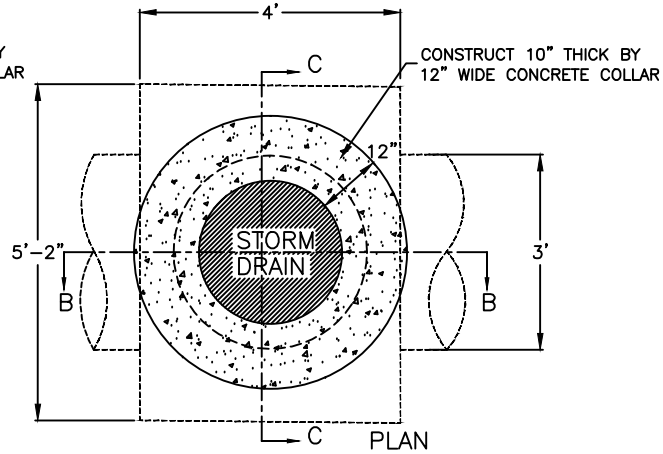

NOTES:

1. ALL REINFORCEMENT SHALL BE #4 DEFORMED STEEL, GRADE 60 KSI PER APWA 03 20 00.

2. ALL REINFORCEMENT SHALL BE PLACED AT 9 INCHES O.C. EACH WAY IN THE FLOOR AND WALLS.

3. THE MANHOLE FRAME AND COVER SHALL BE D & L SUPPLY MODEL A–1181 OR ACCEPTABLE EQUAL.

4. CONCRETE SHALL BE CLASS 4,000 PER APWA 03 30 04.

5. ALL PIPES IN THE BOX SHALL BE CUT FLUSH WITH THE INTERIOR OF THE BOX AND GROUTED SMOOTH.

6. REBAR SHALL HAVE 2 INCHES CLEAR ON EARTH SIDE OF STRUCTURE.

7. IF A PRECAST BOX HAS BEEN ALLOWED, A CONCRETE COLLAR SHALL BE POURED AT ALL CONNECTIONS.

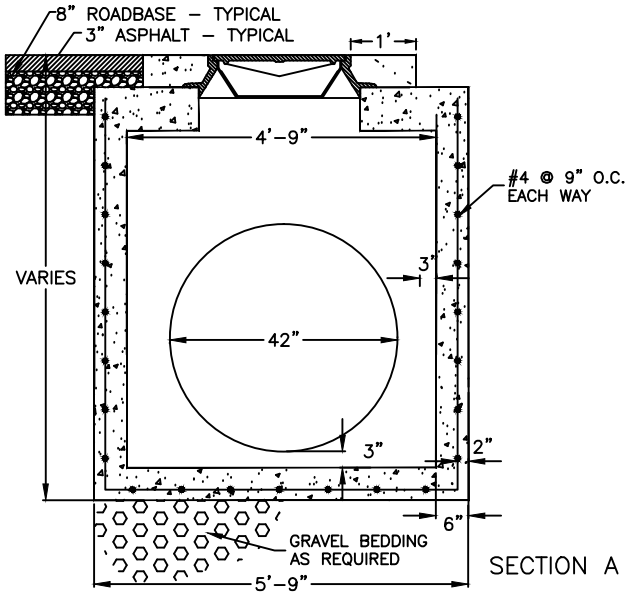

SECTION A

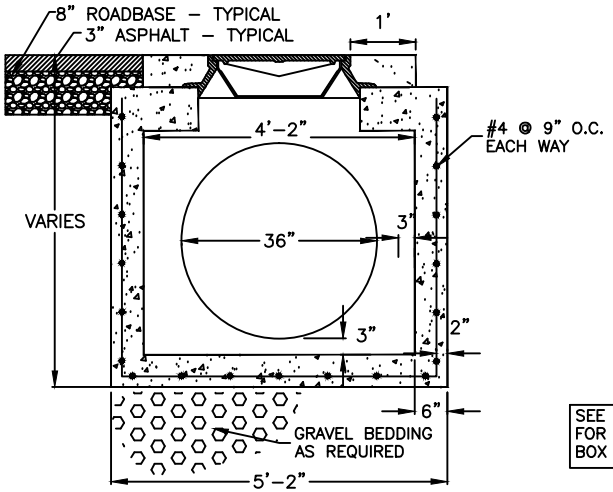

SECTION C

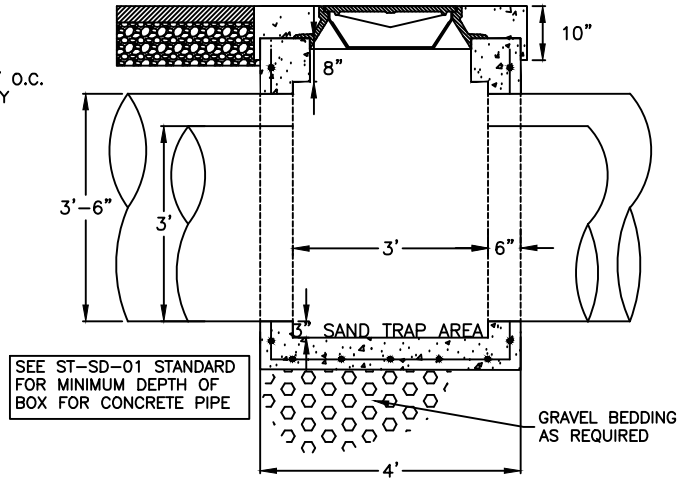

SEE ST–SD–01 STANDARD FOR MINIMUM DEPTH OF BOX FOR CONCRETE PIPE

SECTION B

DRAWN BY DHR	Layton City	STANDARD DRAWING
SCALE NONE		36"–42" CO BOX
DATE 8/05		
REVISIONS		ST–SD–10

CLEANOUT BOX – 48" PIPE

WITH MANHOLE COVER AND CONCRETE COLLAR

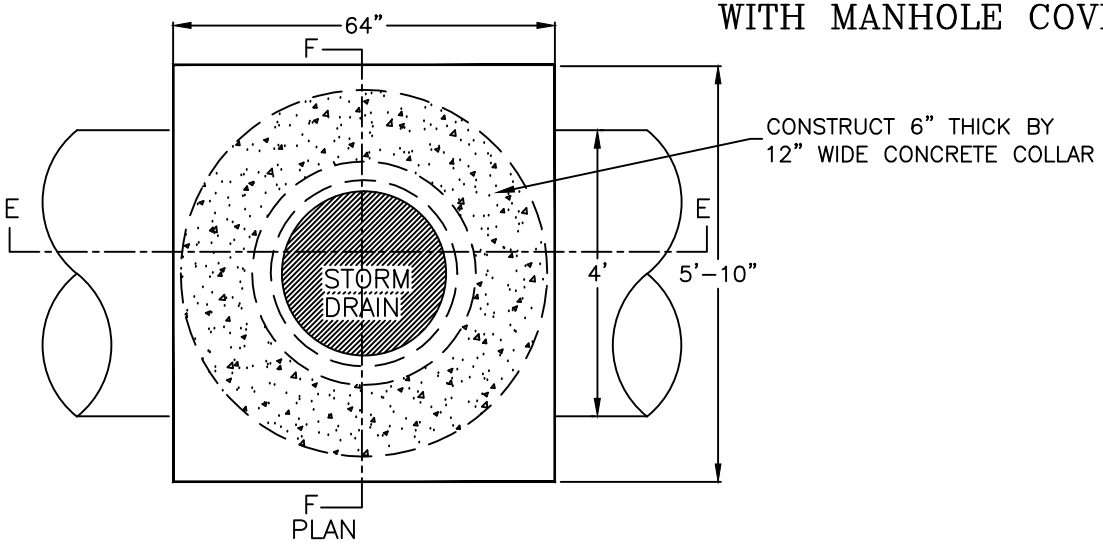

NOTES:

1. ALL STEEL REINFORCEMENT SHALL BE DEFORMED STEEL, GRADE 60 KSI PER APWA 03 20 00.

2. ALL REINFORCEMENT WILL BE PLACED AT 9" O.C. EACH WAY IN THE FLOOR AND THE WALLS.

3. THE CLEANOUT COVER SHALL BE MODEL A–1181 AS MANUFACTURED BY D&L SUPPLY OR EQUAL.

4. CONCRETE SHALL BE CLASS 4,000 PER APWA 03 30 04.

5. ALL PIPES IN THE BOX SHALL BE CUT FLUSH WITH THE INTERIOR OF THE BOX AND GROUTED SMOOTH.

6. REBAR SHALL HAVE 2 INCHES CLEAR ON EARTH SIDE OF STRUCTURE.

7. WALL AND FLOOR THICKNESS SHALL BE 8 INCHES THICK.

8. IF A PRECAST BOX HAS BEEN ALLOWED, A CONCRETE COLLAR SHALL BE POURED AT ALL CONNECTIONS.

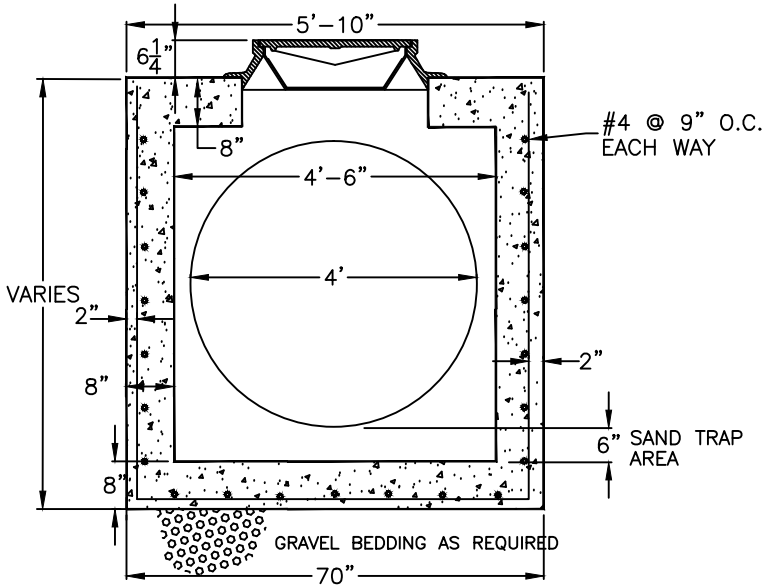

SECTION F

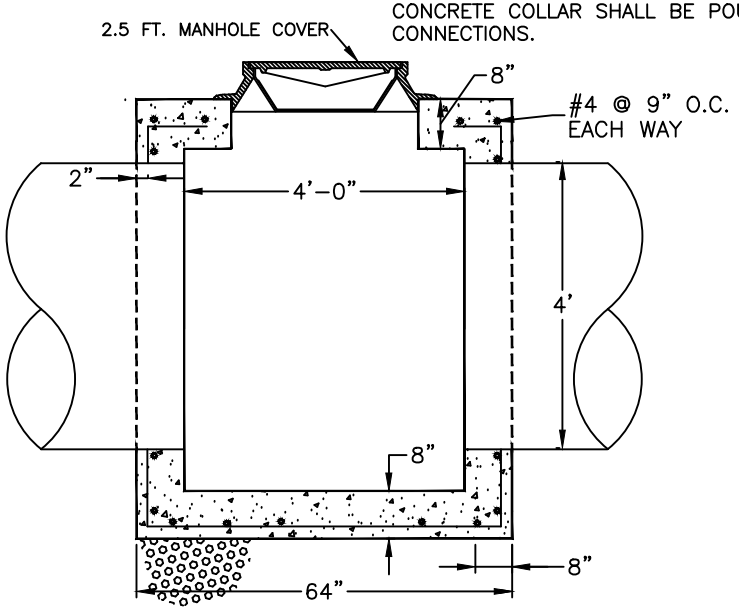

SECTION E

DRAWN BY DHR	Layton City	STANDARD DRAWING 48" CO BOX
SCALE NONE		
DATE 3/05		ST–SD–11
REVISIONS 7/11		

CLEANOUT BOX WITH MANHOLE LID

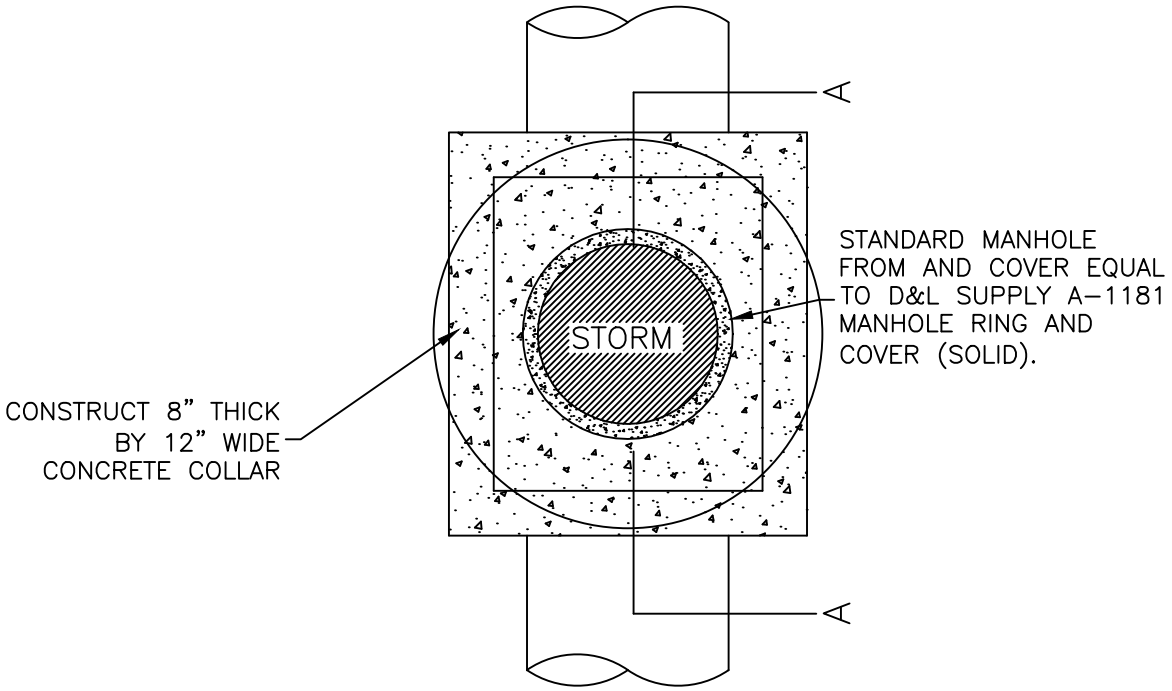

PLAN

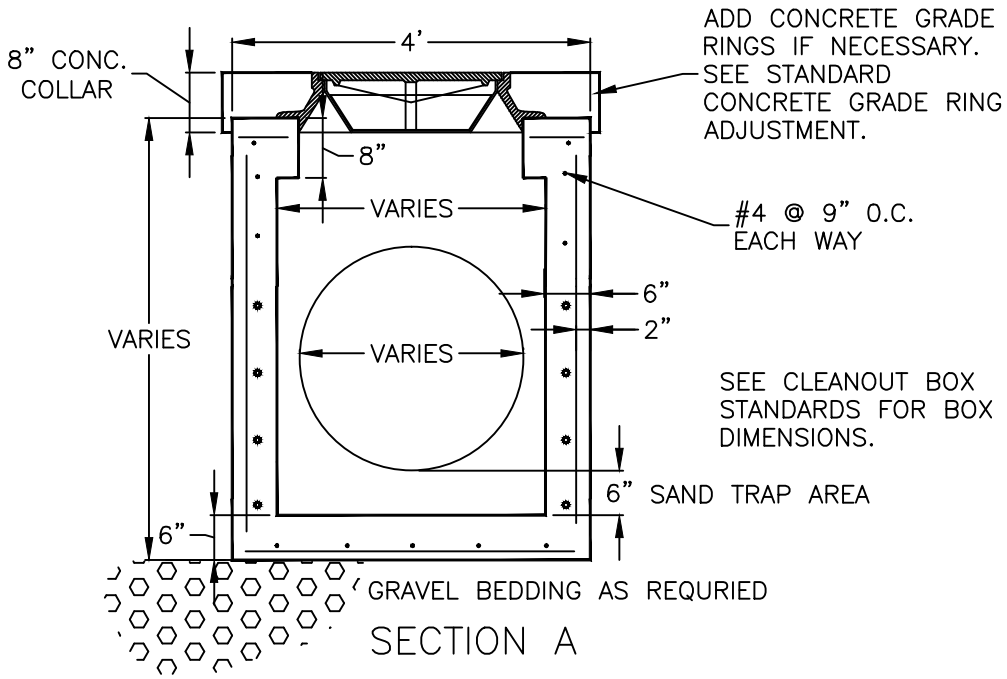

SECTION A

DRAWN BY DHR	Layton City	STANDARD DRAWING CO-MH-LID
SCALE NONE		
DATE 8/02		
REVISIONS		ST-SD-12

COMBINATION CLEANOUT/INLET BOX

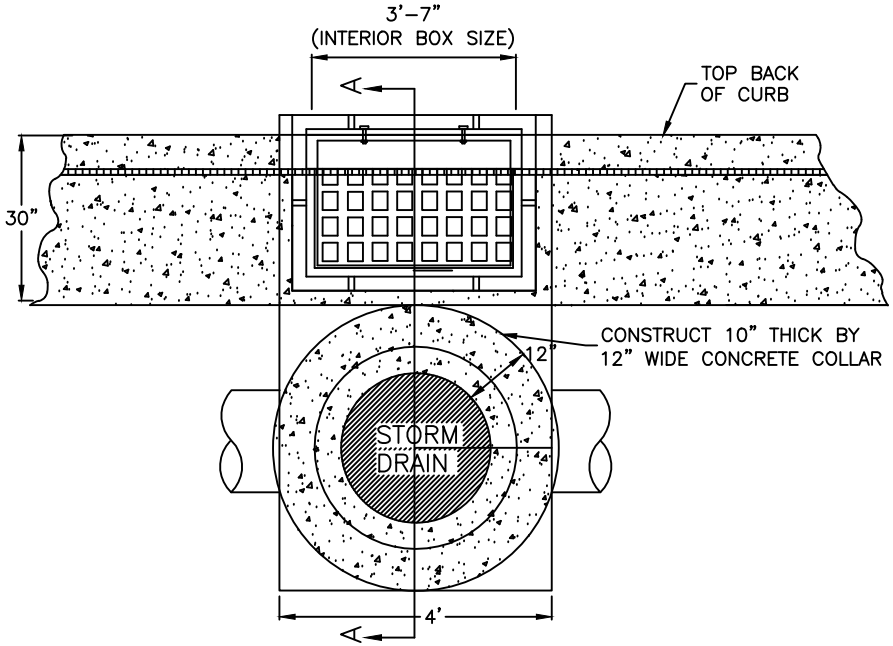

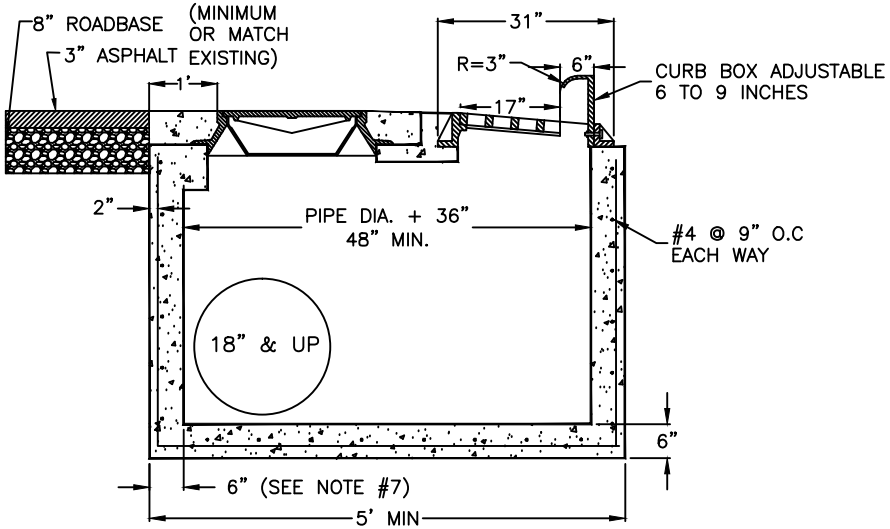

SECTION A

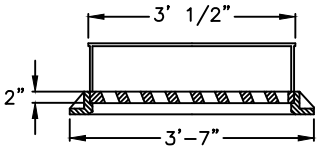

INLET FRAME AND GRATE
WITH ADJUSTABLE CURB BOX
(OLYMPIC FOUNDRY I-3517
OR ACCEPTABLE EQUAL)

NOTES:

1. ALL REINFORCEMENT SHALL BE #4 DEFORMED STEEL, GRADE 60 KSI PER APWA 03 20 00.

2. ALL REINFORCEMENT SHALL BE PLACED AT 9" O.C. EACH WAY IN THE FLOOR AND THE WALLS.

3. THE CLEANOUT COVER SHALL BE MODEL A-1181 AS MANUFACTURED BY D & L SUPPLY OR ACCEPTABLE EQUAL.

4. THE ADJUSTABLE CURB BOX INLET GRATE SHALL BE BICYCLE SAFE (OLYMPIC FOUNDRY I-3517 OR ACCEPTABLE EQUAL).

5. CONCRETE SHALL BE CLASS 4,000 PER APWA 03 30 04.

6. ALL PIPES IN THE BOX SHALL BE CUT WITH THE INTERIOR OF THE BOX AND GROUTED SMOOTH.

7. WALL THICKNESS SHALL BE INCREASED TO 8 INCHES FOR PIPES 36 INCHES AND LARGER.

8. REBAR SHALL HAVE 2" CLEAR ON EARTH SIDE OF STRUCTURE.

9. SEE ST-SD-01 STANDARD FOR EXACT HORIZONTAL LOCATION OF PIPE IN BOX.

10. FRAME MUST TOUCH WALL ON A MINIMUM OF 3 SIDES.

11. IF A PRECAST BOX HAS BEEN ALLOWED, A CONCRETE COLLAR SHALL BE POURED AT ALL CONNECTIONS.

DRAWN BY DHR	Layton City	STANDARD DRAWING COMBO
SCALE NONE		
DATE 8/02		ST-SD-13
REVISIONS 1/15		

COMBINATION CLEANOUT/DOUBLE INLET BOX

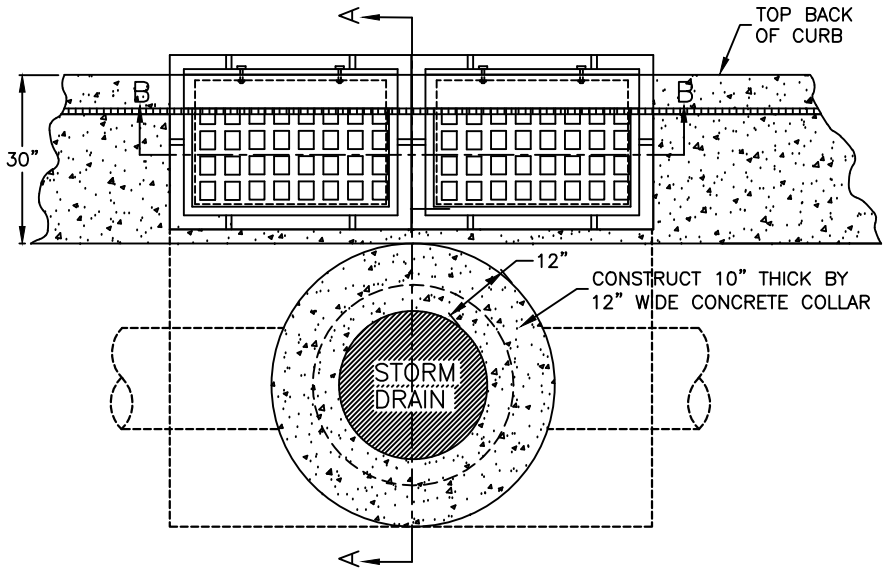

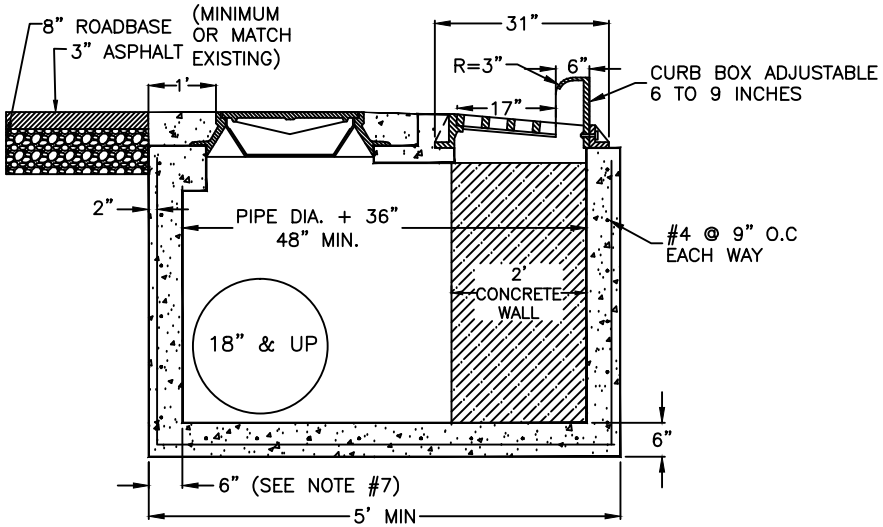

SECTION A

NOTES

1. ALL REINFORCEMENT SHALL BE #4 DEFORMED STEEL, GRADE 60 KSI PER APWA 03 20 00.

2. ALL REINFORCEMENT SHALL BE PLACED AT 9" O.C. EACH WAY IN THE FLOOR AND THE WALLS.

3. THE CLEANOUT COVER SHALL BE MODEL A–1181 AS MANUFACTURED BY D & L SUPPLY OR ACCEPTABLE EQUAL.

4. THE ADJUSTABLE CURB BOX INLET GRATE SHALL BE BICYCLE SAFE (OLYMPIC FOUNDRY I–3517 OR ACCEPTABLE EQUAL).

5. CONCRETE SHALL BE CLASS 4,000 PER APWA 03 30 04.

6. ALL PIPES IN THE BOX SHALL BE CUT WITH THE INTERIOR OF THE BOX AND GROUTED SMOOTH.

7. WALL THICKNESS SHALL BE INCREASED TO 8 INCHES FOR PIPES 36 INCHES AND LARGER.

8. REBAR SHALL HAVE 2" CLEAR ON EARTH SIDE OF STRUCTURE.

9. SEE ST–SD–01 STANDARD FOR EXACT HORIZONTAL LOCATION OF PIPE IN BOX.

10. FRAME MUST TOUCH THE WALLS ON A MINIMUM OF 3 SIDES.

11. IF A PRECAST BOX HAS BEEN ALLOWED, A CONCRETE COLLAR SHALL BE POURED AT ALL CONNECTIONS.

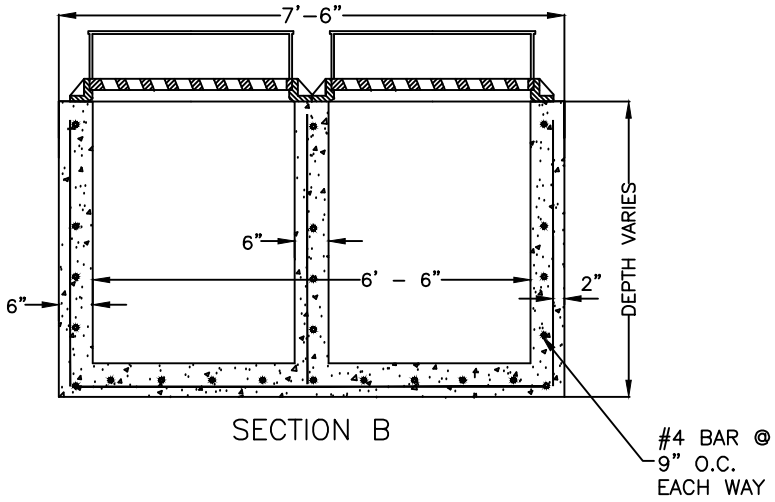

SECTION B

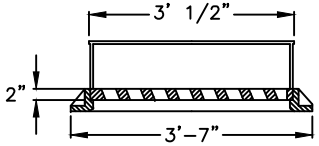

INLET FRAME AND GRATE
WITH ADJUSTABLE CURB BOX
(OLYMPIC FOUNDRY I–3517
OR ACCEPTABLE EQUAL)

DRAWN BY DHR	Layton City	STANDARD DRAWING COMBO–DI
SCALE NONE		
DATE 3/96		
REVISIONS 1/15		ST–SD–14

IRRIGATION DIVERSION BOX

24" X 42" TYPICAL CLEANOUT BOX

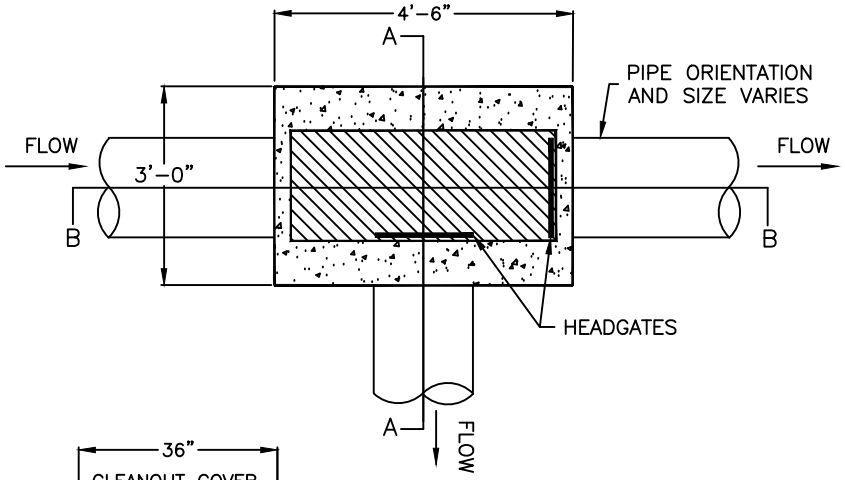

PLAN

NOTES

1. ALL REINFORCEMENT SHALL BE #4 DEFORMED STEEL, GRADE 60 KSI PER APWA 03 20 00.

2. ALL REINFORCEMENT WILL BE PLACED AT 9" O.C. EACH WAY IN THE FLOOR AND THE WALLS.

3. THE CLEANOUT COVER SHALL BE MODEL H-1801 AS MANUFACTURED BY D & L SUPPLY OR EQUAL (LID SIZE IS 20" X 48").

4. CONCRETE SHALL BE CLASS 4,000 APWA 03 30 04.

5. ALL PIPES IN THE BOX SHALL BE CUT FLUSH WITH THE INTERIOR OF THE BOX AND GROUTED SMOOTH.

6. REBAR SHALL HAVE 2" CLEAR ON EARTH SIDE OF STRUCTURE.

7. HEAD GATES MUST BE GALVANIZED STEEL WITH 14 GAUGE SLIDE GATES.

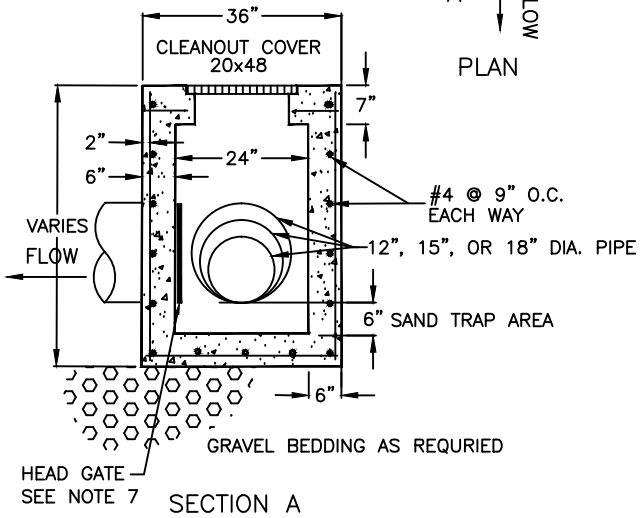

SECTION A

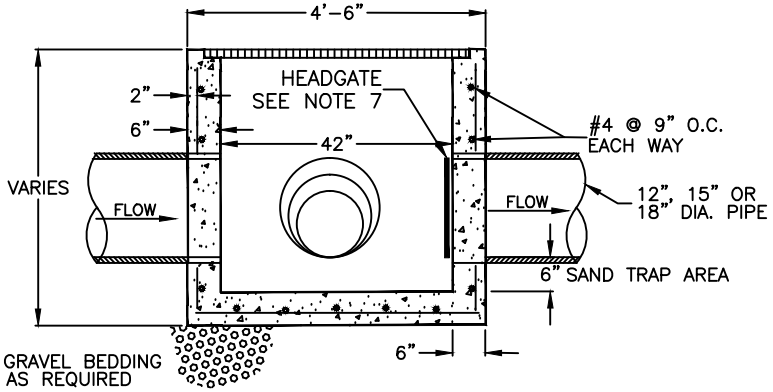

SECTION B

DRAWN BY DHR	Layton City	STANDARD DRAWING IRR-CO
SCALE NONE		
DATE 3/94		ST-SD-15
REVISIONS 3/03		

DETENTION POND INLET/OUTLET STRUCTURE (ORIFICE BOX)

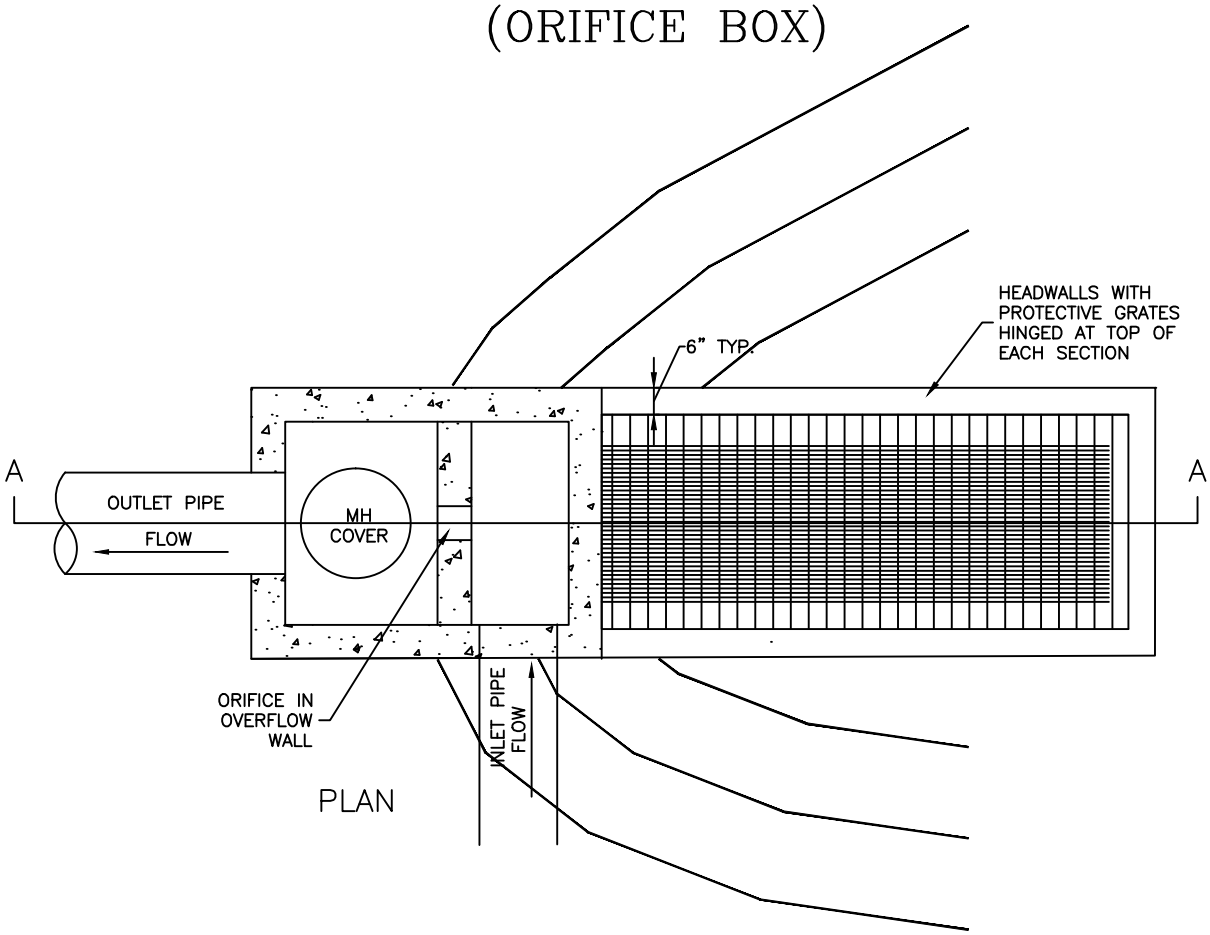

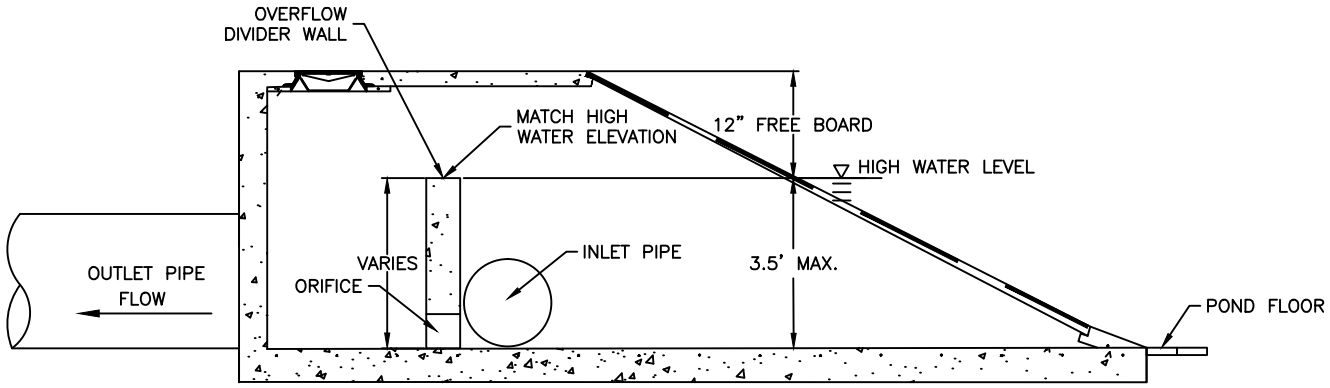

SECTION A

NOTES:

1. ALL REINFORCEMENT SHALL BE #4 DEFORMED STEEL, GRADE 60 KSI PER APWA 03 20 00.

2. CONCRETE SHALL BE CLASS 4,000 PER APWA 03 30 04.

3. ALL PIPES IN THE BOX SHALL BE CUT WITH THE INTERIOR OF THE BOX AND GROUTED SMOOTH.

4. PROTECTIVE GRATE SHALL BE BOLTED TO HEADWALLS, TYPICALLY 4.5' X 3' WITH 4" X 1" SPACED GRATING USING 2" X 3/16" GALVANIZED STEEL FLAT BAR.

DRAWN BY DHR	Layton City	STANDARD DRAWING
SCALE NONE		I/O STRUCTURE
DATE 9/01		ST–SD–16
REVISIONS 4/12		

STORM DRAIN & LAND DRAIN MANHOLE

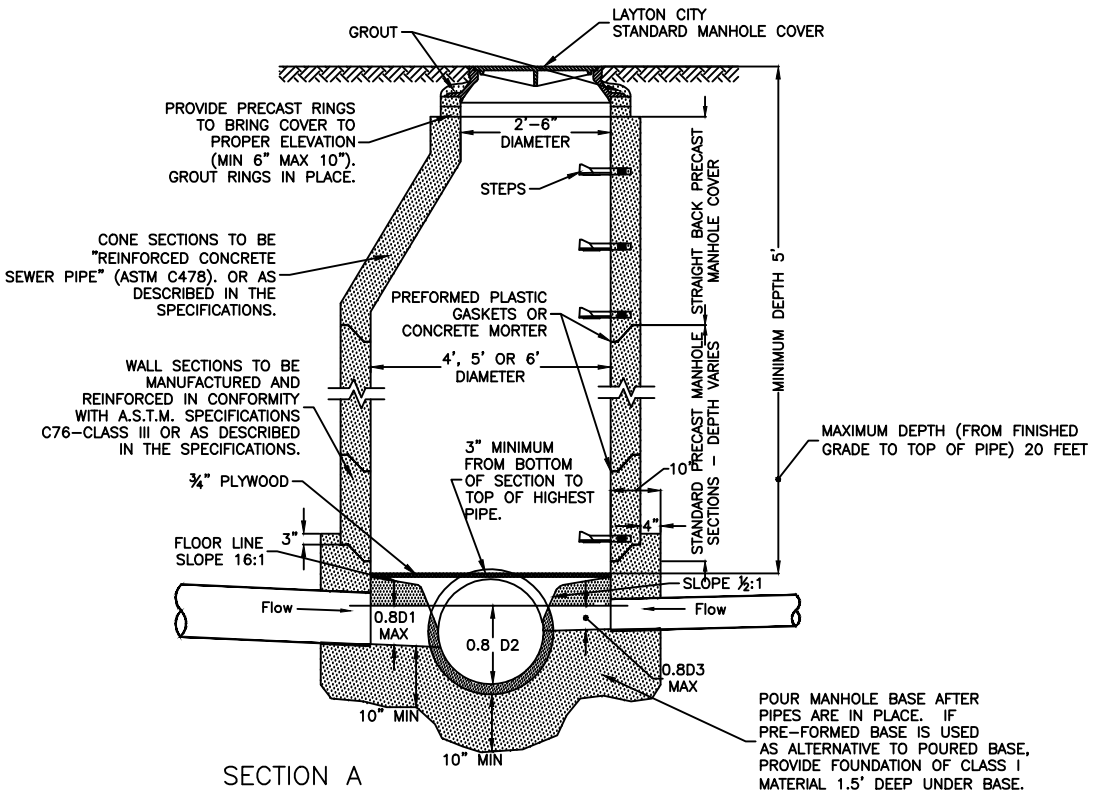

SECTION A

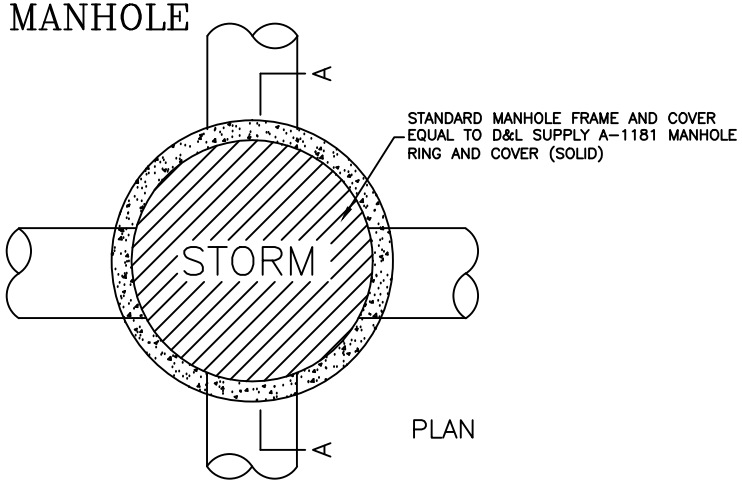

PLAN

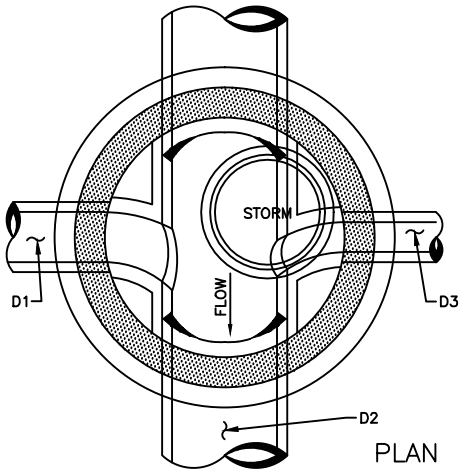

PLAN

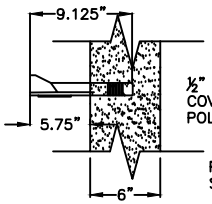

STEP DETAIL

1/2" GRADE 60 STEEL REINFORCEMENT COVERED WITH COPOLYMER POLYPROPYLENE PLASTIC

PROVIDE STEPS WHERE SHOWN IN PLAN.

NOTES:

1. ALL PIPES IN THE MANHOLE SHALL BE CUT FLUSH WITH THE INTERIOR OF THE MANHOLE AND GROUTED SMOOTH.

2. FURNISH AND INSTALL 3/4" PLYWOOD FALSE BOTTOM COVER IN ALL NEW OR EXISTING MANHOLES AROUND WHICH GRADING OR SURFACING IS BEING PERFORMED.

3. IF MANHOLE IS TO BE POURED IN PLACE FOLLOW SAME PATTERN AS SHOWN EXCEPT USE 8" MIN. WALL THICKNESS.

4. PROVIDE STUBS WHERE SHOWN ON THE PLAN DRAWINGS.

5. MANHOLES MAY BE 4', 5', OR 6' AS SHOWN ON THE PLAN DRAWINGS.

6. AFTER ALL GRADING AROUND MANHOLE HAS BEEN COMPLETED AND FINAL SURFACING IS IN PLACE, REMOVE DEBRIS AND TEMPORARY FALSE BOTTOM COVER.

DRAWN BY DHR	Layton City	STANDARD DRAWING SDMH
SCALE NONE		
DATE 9/93		ST-SD-17
REVISIONS 4/04		

MANHOLE COVER

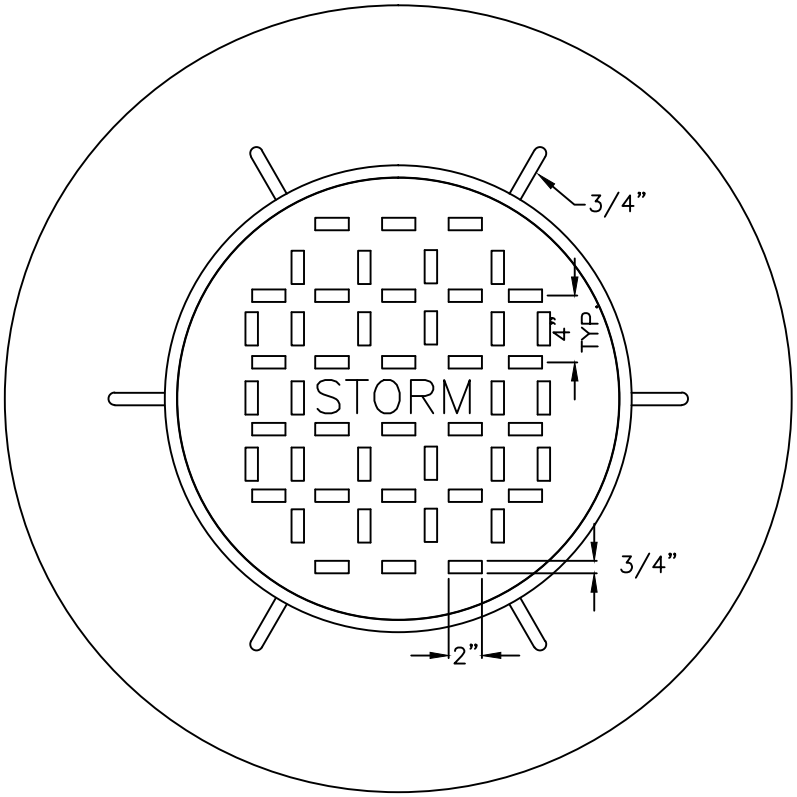

PLAN RING & COVER

STANDARD MANHOLE FRAME AND COVER EQUAL TO D&L SUPPLY A–1181 MANHOLE RING & COVER (SOLID)

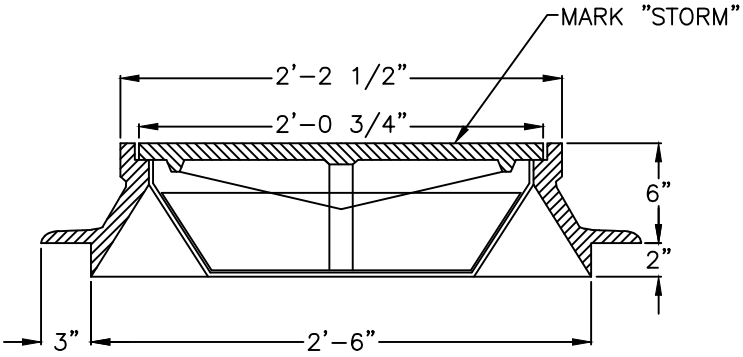

SECTION

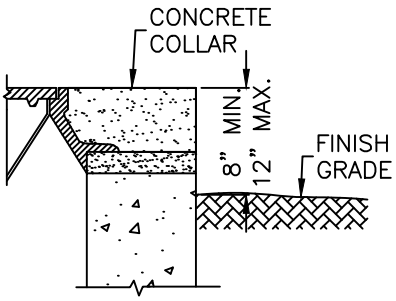

DETAIL
UNIMPROVED AREAS

NOTE: CONTRACTOR SHALL POUR A CONCRETE COLLAR (MIN. 12") AROUND THE CAST IRON RING, EVEN WHEN THE MANHOLE IS LOCATED IN AN UNIMPROVED LOCATION.

DRAWN BY DHR	Layton City	STANDARD DRAWING
SCALE NONE		SDMH–LID
DATE 1/00		ST–SD–18
REVISIONS		

TYPICAL FOOTING AND FOUNDATION SUBDRAIN

NOTES:
1. MINIMUM OF TWO CLEANOUTS REQUIRED IN THE FOLLOWING LOCATIONS:
   - WHERE THE LATERAL COMES TO THE HOME AND TEES OFF
   - ANYWHERE ALONG THE REAR PORTION OF THE HOUSE OPPOSITE OF THE GARAGE

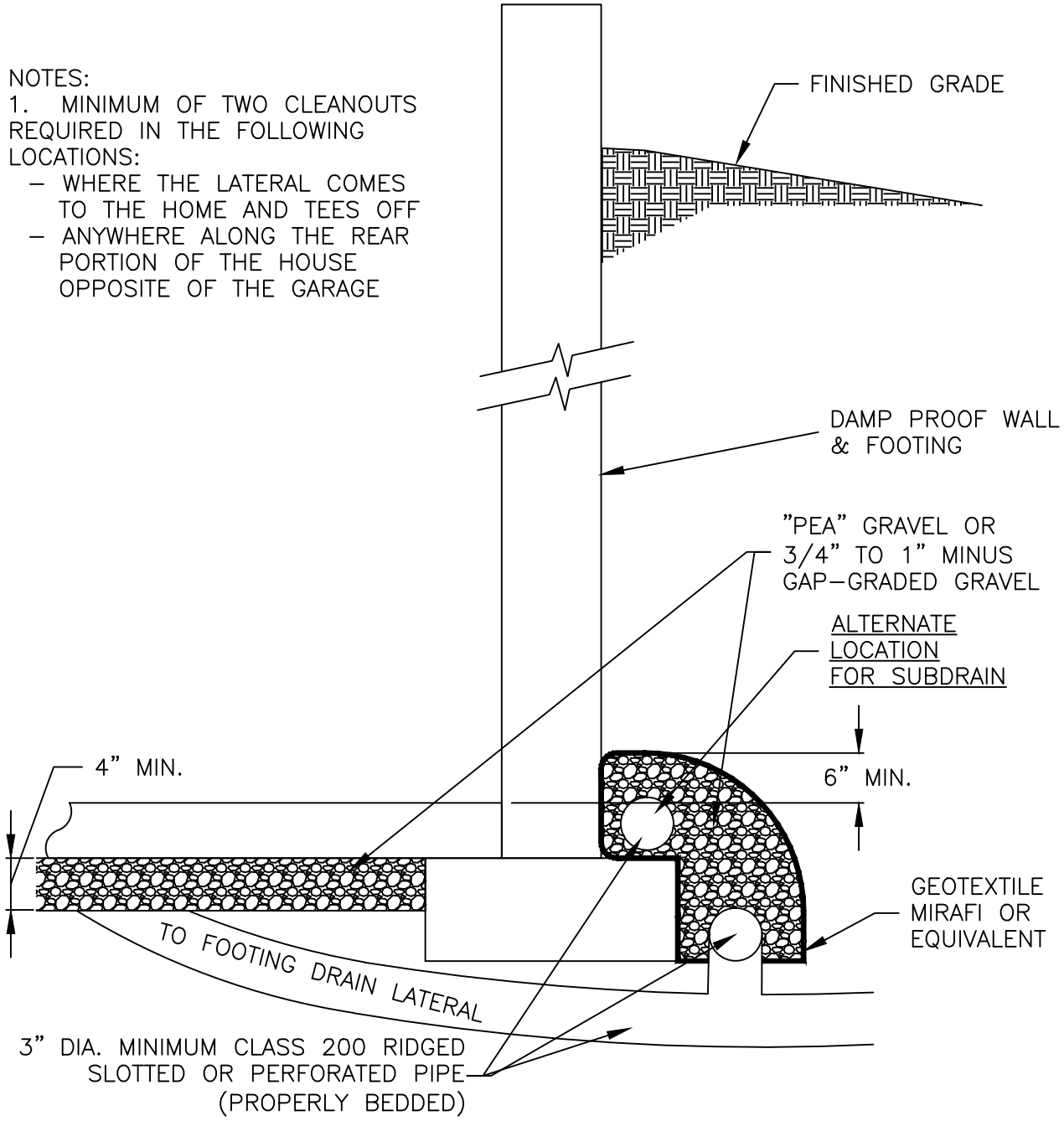

DRAWN BY DHR	Layton City	STANDARD DRAWING
SCALE NONE		FOOTING
DATE 10/03		ST-SD-19
REVISIONS DHR		

POND BERM CROSS SECTION

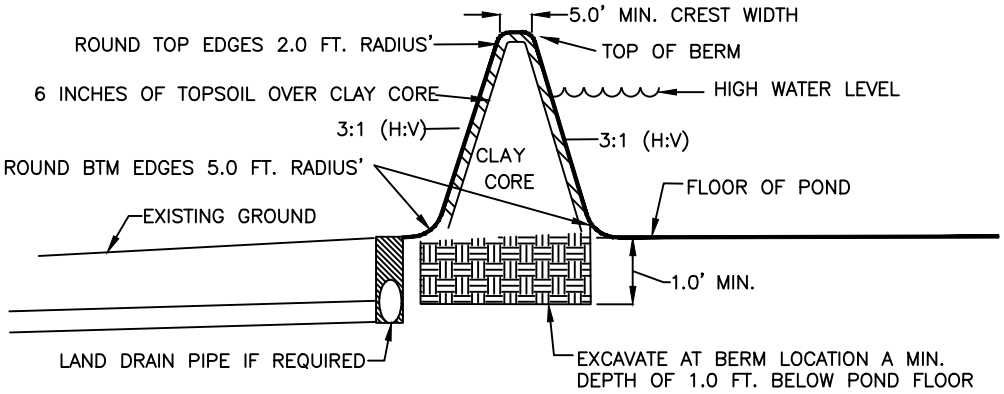

ADDITIONAL REQUIREMENTS FOR BERMS (GRADING, TESTING, EXCAVATION, BEDDING, BORROW MATERIAL, COMPACTION, ETC).

(1) THE EMBANKMENT SHALL BE CONSTRUCTED WITH IMPORTED CLAY (CL, BASED ON THE UNIFIED SOIL CLASSIFICATION) HAVING THE FOLLOWING PROPERTIES: LIQUID LIMIT INDEX OF 50 (MAXIMUM) TO 30 (MINIMUM), AND PLASTICITY INDEX OF 25 (MAXIMUM) TO 13 (MINIMUM), AT A 3 FOOT HORIZONTAL TO 1 FOOT VERTICAL SLOPE. SLOPES WHICH ARE CONSTRUCTED IN AREAS WHERE THE EXCAVATION WILL EXTEND BELOW THE CURRENT WATER LEVEL REQUIRE THE INSTALLATION OF AN 8 INCH PVC SDR–35 D–3034 PIPE TO INTERCEPT THE WATER PRIOR TO REACHING THE SLOPE. THIS DRAIN LINE PROVIDES THE DEWATERING AND SLOPE STABILIZATION TYPICALLY REQUIRED BY THE SOILS REPORT.

(2) PRIOR TO PLACING GRADING FILL AND FILL FOR EMBANKMENTS, REMOVE THE EXISTING SURFACE ORGANIC MATERIAL, SOD, TOPSOIL AND OTHER DELETERIOUS MATERIALS.

(3) THE BASE OF THE CLAY EMBANKMENTS SHALL BE ESTABLISHED A MINIMUM OF 1 FOOT BELOW THE ADJACENT GROUND ELEVATION. PRIOR TO PLACEMENT OF FILL, THE EXPOSED EMBANKMENT SUBGRADE SHALL BE OBSERVED BY LAYTON CITY.

(4) EMBANKMENT FILL SHALL BE COMPACTED AT A MOISTURE CONTENT WITHIN 2% OF OPTIMUM, (DRYING OF THE SOIL MAY BE REQUIRED), PLACED IN 8 INCH LIFTS, IN HORIZONTAL LAYERS AND COMPACTED WITH A MEDIUM TO HEAVY WEIGHT SEGMENTED PAD OR SHEEP'S FOOT ROLLER TO A MINIMUM OF 95% OF THE MAXIMUM DRY DENSITY AS DETERMINED BY ASTM D–698 BEFORE PLACING THE SUBSEQUENT LIFT.

(5) FILL PLACEMENT SHALL BE CONTINUOUS TO MAINTAIN CONSTANT MOISTURE CONTENT. IF EMBANKMENTS ARE CONSTRUCTED WITH SIGNIFICANT TIME PERIODS BETWEEN PLACEMENT OF LIFTS, THE UPPER 6 INCHES OF THE FILL SURFACE SHALL BE SCARIFIED, MOISTURE CONDITIONED, AND RECOMPACTED, AS RECOMMENDED ABOVE, BEFORE PLACING AND COMPACTING THE SUBSEQUENT LIFT.

(6) EMBANKMENT COMPACTING AND MOISTURE CONTENT SHALL BE EVALUATED DURING CONSTRUCTION THROUGH VISUAL OBSERVATION AND FIELD TESTING WITH A NUCLEAR DENSITY GAUGE.

(7) INTERIOR AND EXTERIOR EMBANKMENT SLOPES SHALL BE CONSTRUCTED NO STEEPER THAN 3H:1V.

(8) EMBANKMENTS SHALL HAVE A MINIMUM CREST WIDTH OF 5 FEET. THE CREST SHALL BE SLOPED AT A MINIMUM OF 1% TOWARD THE POND.

(9) THE EMBANKMENTS SHALL BE OVER BUILT A MINIMUM OF 2 FEET, AND THEN TRIMMED BACK TO THEIR FINAL SLOPE CONFIGURATION (DUE TO DIFFICULTY IN COMPACTION THE OUTER PORTION OF SLOPING FILLS).

(10) THE BERM EDGES SHALL BE ROUNDED TO A MINIMUM OF A 5–FOOT RADIUS AT THE BOTTOM AND 2–FOOT RADIUS AT THE TOP.

(11) 6" OF TOPSOIL SHALL BE PLACED OVER CLAY CORE BERMS FOR LANDSCAPING SOD.

(12) COMPACTION TESTING SHALL OCCUR EVERY 100 FEET ALONG THE CENTERLINE OF THE BERM FOR EACH LIFT.

DRAWN BY DHR	Layton City	STANDARD DRAWING
SCALE NONE		POND BERM
DATE 9/08		ST–SD–20
REVISIONS		

STORM DRAIN DETENTION BASIN SPRINKLING SYSTEM SPECIFICATIONS FOR CITY PONDS

NOTES:

1. FOR LARGE RECTANGLE VALVE BOXES, INSTALL CARSON–BROOKS PLASTICS, INC. MODEL NUMBER 1220–4 NON BOLT T–COVER AND MODEL 1220–12 BOX IN GREEN.
2. FOR SMALL CIRCULAR VALVE BOXES, INSTALL CARSON–BROOKS PLASTICS, INC. MODEL 910–2 NON BOLT COVER AND MODEL 910–10 BODY IN GREEN.
3. FOR QUICK COUPLING VALVES, INSTALL RAIN BIRD QUICK COUPLING VALVES. 1" MMINIMUM.
4. FOR CONTROL VALVES, INSTALL RAIN BIRD EFB–CP–R SERIES VALVES.
5. FOR CONTROLLERS, INSTALL RAIN BIRD ESP–MC SERIES OUTDOOR CONTROLLER.
6. FOR SPRAY HEADS, INSTALL RAIN BIRD IRRIGATION PRODUCTS. DESIGN SYSTEM FOR HEAD TO HEAD COVERAGE.
7. FOR PIPE, INSTALL PWpoly POLY–LD P.R. 125 PSI SCHEDULE 40 PIPE, MATERIAL IS LINEAR LOW DENSITY POLYETHYLENE PE 1404 AND MEETS CELL CLASS 123110C.
8. INSTALL BACKFLOW PREVENTION ON ALL SPRINKLER SYSTEMS CONNECTED TO CULINARY WATER AS REQUIRED BY LAYTON CITY AND UTAH DIVISION OF DRINKING WATER STANDARDS.

DRAWN BY SH	Layton City	STANDARD DRAWING
SCALE NONE		SDBASIN SPRINKLER
DATE 6/06		ST–SD–21
REVISIONS		

COMBINATION CLEANOUT/INLET BOX IN A WATERWAY

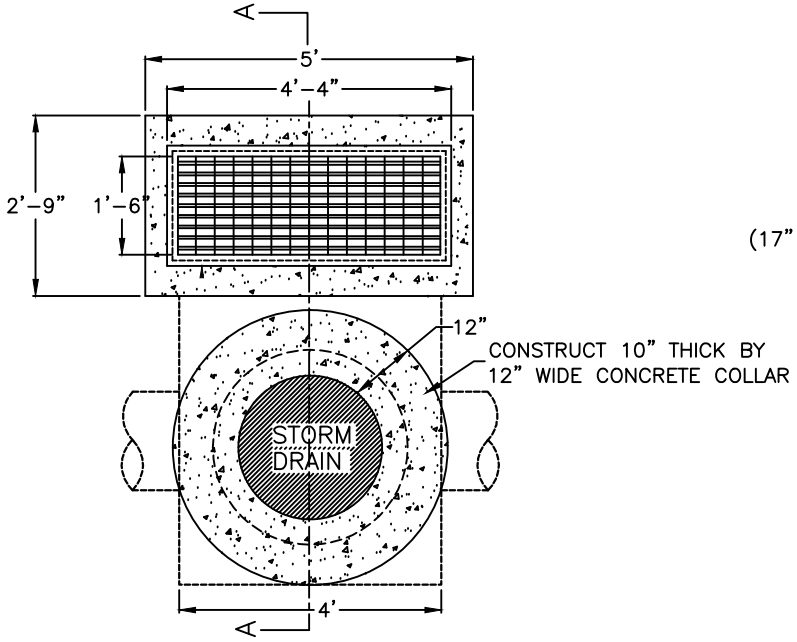

PLAN VIEW

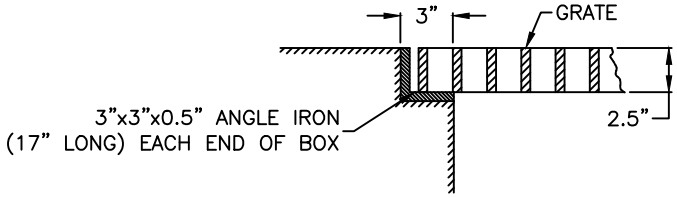

LEDGE DETAILS

WATERWAY INLET
GRATE

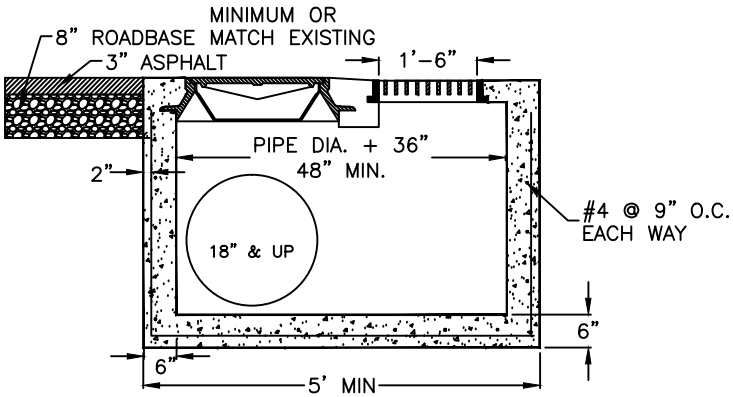

SECTION A

NOTES:

1. ALL REINFORCEMENT SHALL BE #4 DEFORMED STEEL, GRADE 60 KSI PER APWA 03 20 00.

2. ALL REINFORCEMENT SHALL BE PLACED AT 9" O.C. EACH WAY IN THE FLOOR AND THE WALLS.

3. THE CLEANOUT COVER SHALL BE MODEL A-1181 AS MANUFACTURED BY D & L SUPPLY OR ACCEPTABLE EQUAL.

4. THE ADJUSTABLE CURB BOX INLET GRATE SHALL BE BICYCLE SAFE (OLYMPIC FOUNDRY I-3517 OR ACCEPTABLE EQUAL).

5. CONCRETE SHALL BE CLASS 4,000 PER APWA 03 30 04.

6. ALL PIPES IN THE BOX SHALL BE CUT WITH THE INTERIOR OF THE BOX AND GROUTED SMOOTH.

7. REBAR SHALL HAVE 2" CLEAR ON EARTH SIDE OF STRUCTURE.

8. IF A PRECAST BOX HAS BEEN ALLOWED, A CONCRETE COLLAR SHALL BE POURED AT ALL CONNECTIONS.

DRAWN BY DHR	Layton City	STANDARD DRAWING COMBO-WWY
SCALE NONE		
DATE 6/98		ST-SD-22
REVISIONS		

INLET BOX – 15" PIPE
WITH STUB TO IRRIGATION DITCH

CURB & GUTTER PLAN

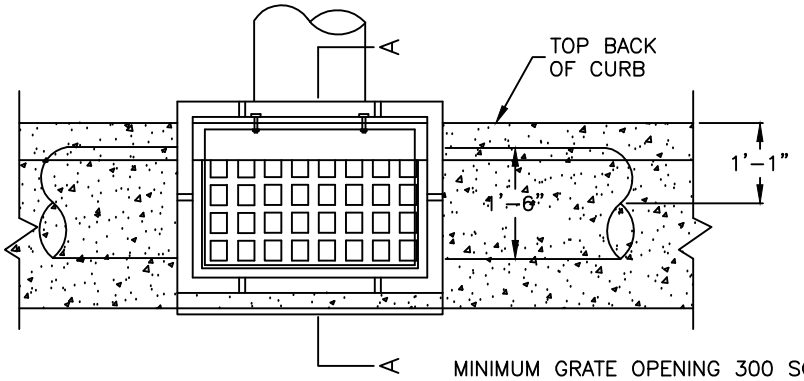

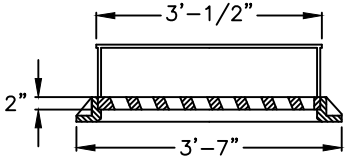

INLET FRAME AND GRATE WITH
ADJUSTIBLE CURB BOX
(OLYMPIC FOUNDRT I–3517 OR
ACCEPTABLE EQUAL)

* INTERIOR BOX SIZE 2' X 3'

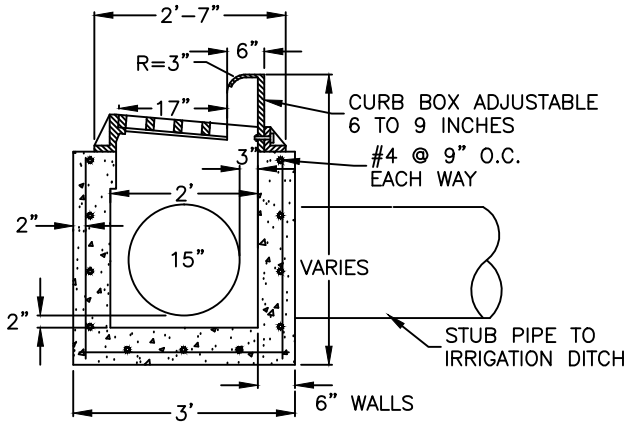

SECTION A

NOTES:

1. ALL REINFORCEMENT SHALL BE #4 DEFORMED STEEL, GRADE 60 KSI PER APWA 03 20 00.

2. ALL REINFORCEMENT SHALL BE PLACED AT 9" O.C. EACH WAY IN THE FLOOR AND THE WALLS.

3. THE ADJUSTABLE CURB BOX INLET GRATE SHALL BE BICYCLE SAFE. OLYMPIC FOUNDRY I–3517 OR ACCEPTABLE EQUAL.

3A. THE WATERWAY INLET GRATE SHALL BE BICYCLE SAFE AND SHALL BE SET ON 3" X 3" X 1/2" ANGLE IRON SUPPORTS CAST IN EACH END OF THE BOX. D & L SUPPLY I–1805 OR ACCEPTABLE EQUAL. (SEE LARGE DETAIL)

4. CONCRETE SHALL BE CLASS 4,000 PER APWA 03 30 04.

5. ALL PIPES IN THE BOX SHALL BE CUT WITH THE INTERIOR OF THE BOX AND GROUTED SMOOTH.

6. REBAR SHALL HAVE 2" CLEAR ON EARTH SIDE OF STRUCTURE.

DRAWN BY DHR	Layton City	STANDARD DRAWING IB–DITCH
SCALE NONE		
DATE 3/96		
REVISIONS 10/97		ST–SD–23

8 INCH DRAIN LINE INSTALLATION FOR SLOPE STABILIZATION/DEWATERING

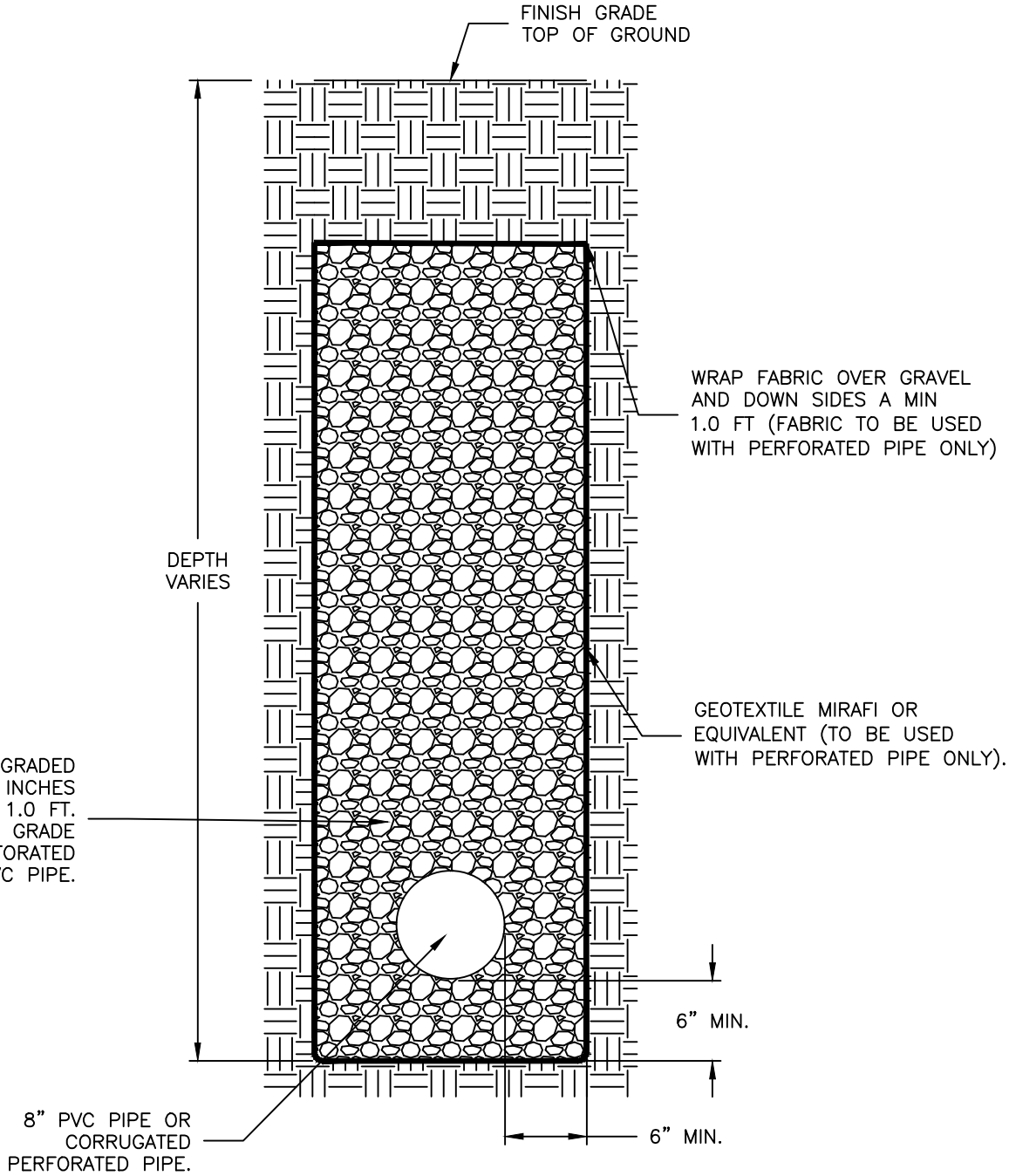

DRAWN BY DHR	Layton City	STANDARD DRAWING
SCALE NONE		8" PERF
DATE 4/04		ST-SD-24
REVISIONS		

STANDARD PLANS
FOR STREET LIGHTING

APRIL 2016

James Woodruff, City Engineer
Shannon Hansen, Assistant City Engineer – Development
Stephen Jackson, Assistant City Engineer – Capital Projects
Staff Engineers: Ryan Bankhead, Ashley Thoman, Mark Stenquist, Stacy Majewski, Amy Bean

STREET LIGHT DRAWING INDEX

DETAIL NAME	LIGHT TYPE	PAGE #
Tear Drop Pole and Fixture	SL-01	ST-LT-01
Standard Residential Pole and Fixture	SL-02	ST-LT-02
Standard Residential Pole and Fixture (Optional cage on fixture)	SL-02A	ST-LT-03
Standard Residential Pole and Fixture (Optional cage and fluted pole)	SL-02B	ST-LT-04
Double Light Fluted Pole and Fixture	SL-03	ST-LT-05
Single Light Fluted Pole and Fixture	SL-04	ST-LT-06
Arterial Conduit and Power Layout		ST-LT-07
Street Lights Underground		ST-LT-08
Arterial Street Lights Underground (Details and Notes)		ST-LT-09
Single Street Light Installation		ST-LT-10
Rocky Mountain Power Detail		

TEAR DROP POLE AND FIXTURE – SL–01

MAIN ARTERIAL STREET LIGHT

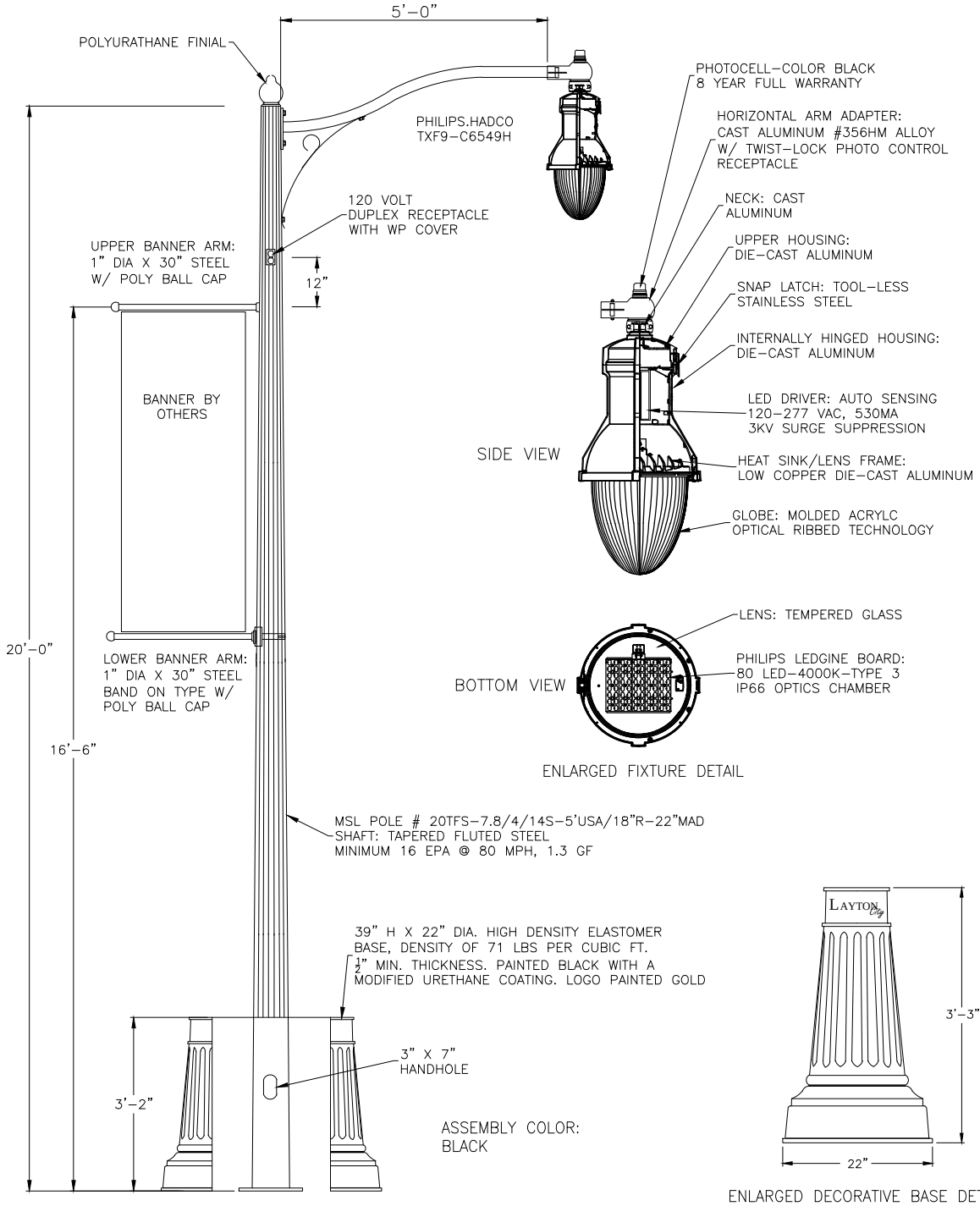

DRAWN BY MTL	Layton City	STANDARD DRAWING
SCALE NONE		SL–01 TEAR DROP FIXTURE
DATE 5/11		ST–LT–01
REVISIONS 7/13		

STANDARD RESIDENTIAL POLE AND FIXTURE SL-02

SUBDIVISION ROADS – 66' ROW AND LESS

LUMILOCK LED SPECIFICATIONS:
- TYPE III ASYMETRIC DISTRIBUTION
- 4000K (CCT) 40 LUXEON REBEL ES LED'S ON ALUMINUM CORE PCB. SEALED ACRYLIC LENS, IP66 RATED.
- MINIMUM 65 COLOR RENDERING INDEX (CRI)
- 120–277 VAC, 50–60Hz AUTO SENSING.
- 10kV/10kA SURGE SUPPRESSION BUILT IN.

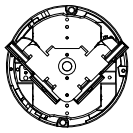

TOP VIEW

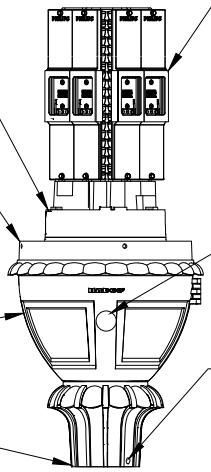

LUMILOCK LED ASSEMBLY

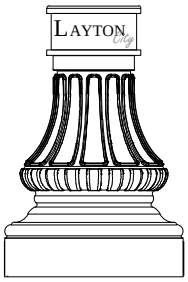

BASE DETAIL

FINISH;
BLACK

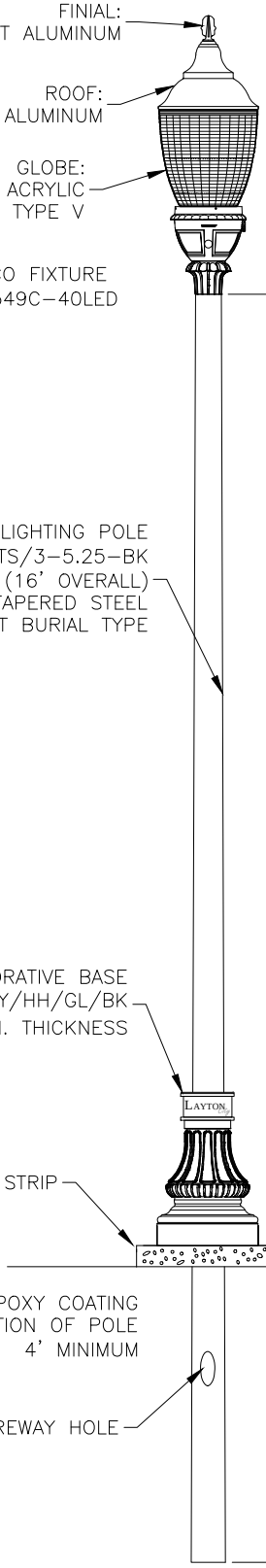

DRAWN BY MTL	Layton City	STANDARD DRAWING
SCALE NONE		SL–02 RES. POL & FIXTURE
DATE 5/11		ST–LT–02
REVISIONS 07/13		

STANDARD RESIDENTIAL LIGHT FIXTURE – SL–02A
(WITH OPTIONAL CAGE ON FIXTURE)

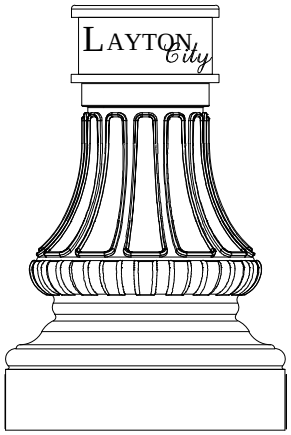

BASE DETAIL
FINISH: BLACK

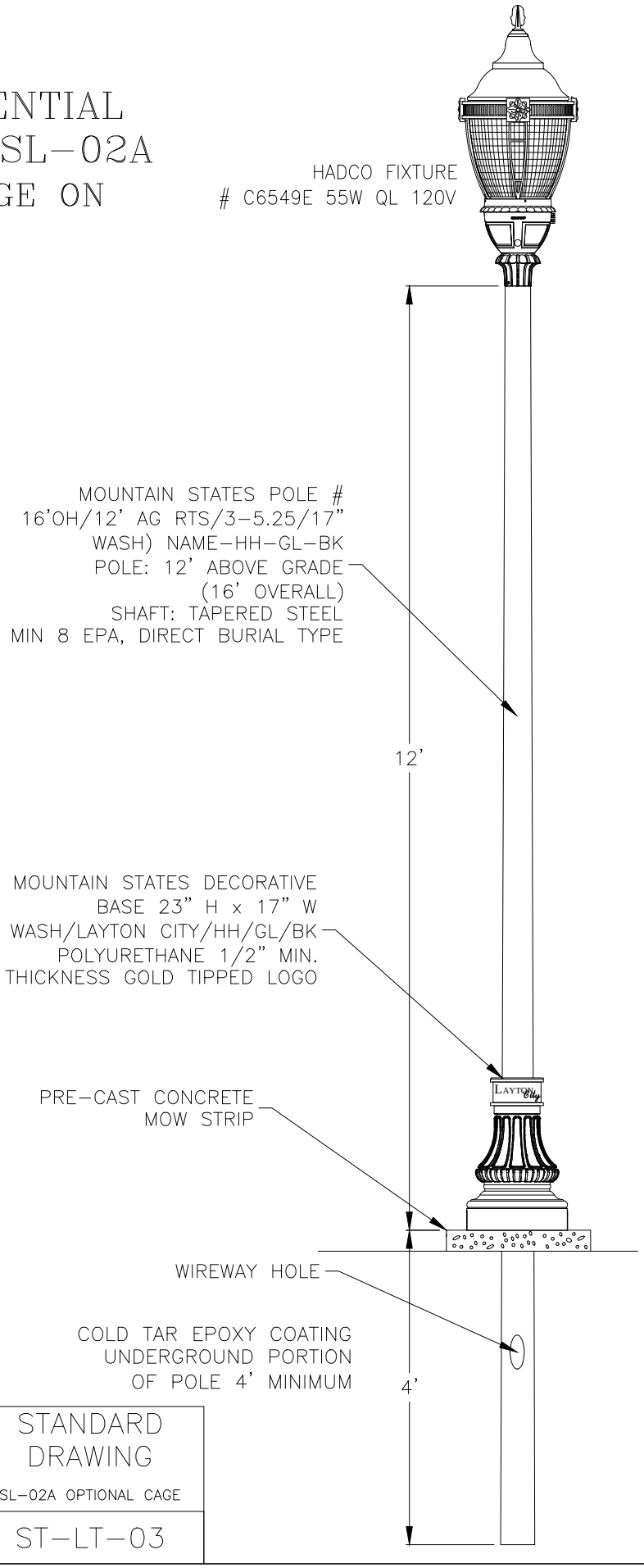

DRAWN BY MTL	Layton City	STANDARD DRAWING
SCALE NONE		SL–02A OPTIONAL CAGE
DATE 5/11		ST–LT–03
REVISIONS 1/12		

TYPICAL RESIDENTIAL LIGHT FIXTURE – SL–02B
(WITH OPTIONAL CAGE AND FLUTED POLE)

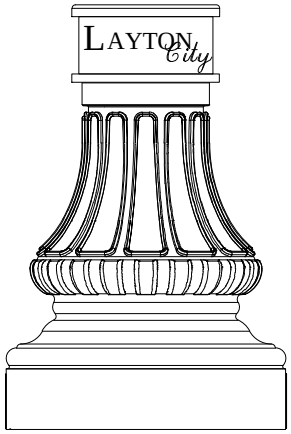

BASE DETAIL
FINISH: BLACK

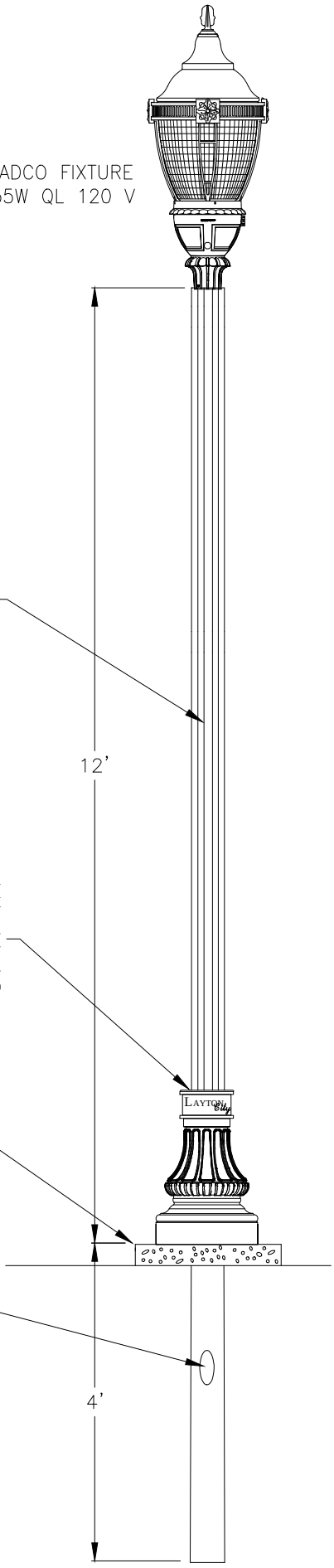

DRAWN BY MTL	Layton City	STANDARD DRAWING
SCALE NONE		SL–02B OPT. CAGE, FLUTE
DATE 5/11		ST–LT–04
REVISIONS 1/12		

DOUBLE LIGHT FLUTED POLE – SL–03

COMMERCIAL AND/OR RESIDENTIAL AS DESIGNATED BY THE CITY ENGINEER

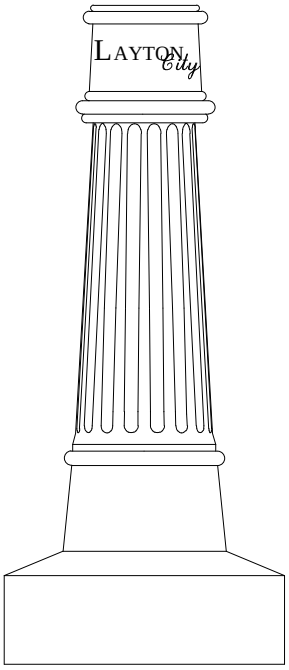

BASE DETAIL
FINISH: BLACK

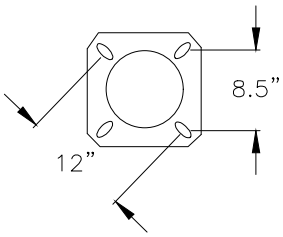

ANCHOR BASE DETAIL
12" BOLT CIRCLE
ANCHOR BOLTS: 3/4" x 18"

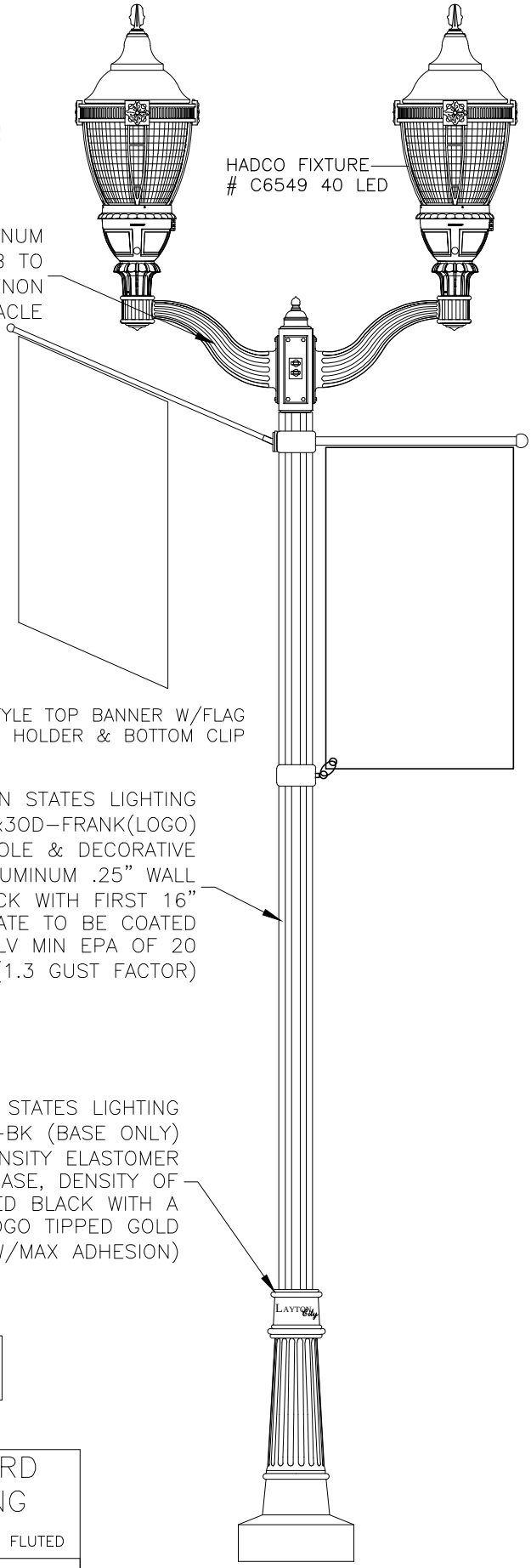

SEE ST–LT–08 FOR REQUIRED CONCRETE BASE DETAIL

DRAWN BY MTL	Layton City	STANDARD DRAWING
SCALE NONE		SL–03 DBL LIGHT FLUTED
DATE 5/11		
REVISIONS 1/12		ST–LT–05

SINGLE LIGHT FLUTED POLE AND FIXTURE SL-04

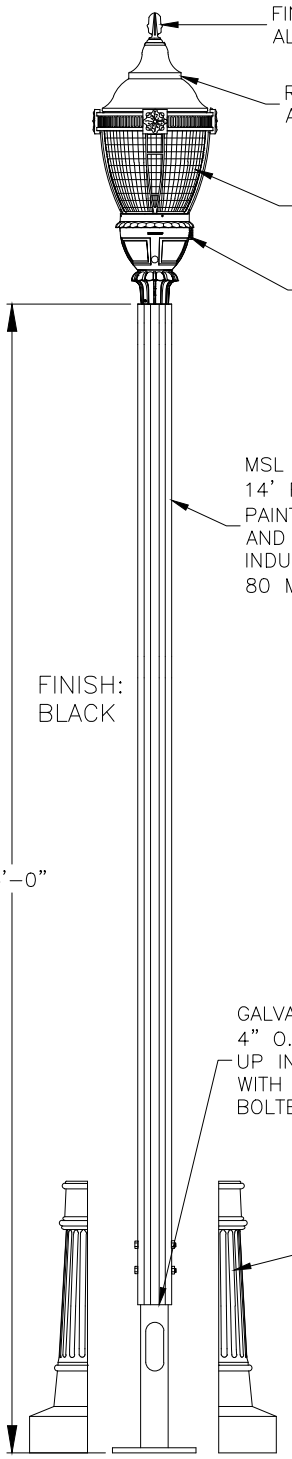

LUMILOCK LED SPECIFICATIONS:
- TYPE III ASYMETRIC DISTRIBUTION.
- 4000K (CCT) 80 LUXEON REBEL ES LED'S ON ALUMINUM CORE PCB. SEALED ACRYLIC LENS, IP66 RATED.
- MINIMUM 65 COLOR RENDERING INDEX (CRI).
- 120-277 VAC, 50-60Hz AUTO SENSING.
- 10kV/10kA SURGE SUPPRESSION BUILT IN.

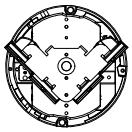

TOP VIEW

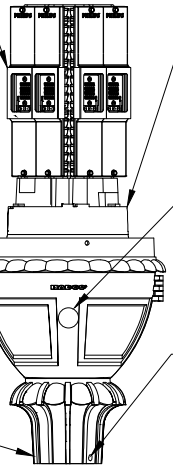

LUMILOCK LED ASSEMBLY

MSL POLE: #14EFA-5.0-3x3TT
14' FLUTED ALUMINUM .25" WALL THICKNESS PAINTED BLACK WITH FIRST 16" OF POLE AND BASE PLATE TO BE COATED WITH INDUSTRIAL COLD GALV. MIN EPA OF 20 IN 80 MPH ZONE (1.3 GUST FACTOR)

GALVANIZED ANCHOR PLATE
4" O.D. TRANSITION PIPE SLID UP INSIDE ALUMINUM EXTRUSION WITH A COMPRESSION FIT & BOLTED TOGETHER.

MSL DECORATIVE BASE:
#FRANKLIN 40"x17" DIA. HIGH DENSITY ELASTOMER BASE
DENSITY OF 71 LBS PER CU. FT.
$\frac{1}{2}$" MIN. THICKNESS
PAINTED BLACK WITH A MODIFIED URETHANE COATING. LOGO PAINTED GOLD

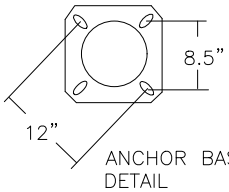

ANCHOR BASE DETAIL
12" BOLT CIRCLE
ANCHOR BOLTS:
$\frac{3}{4}$" X 18"

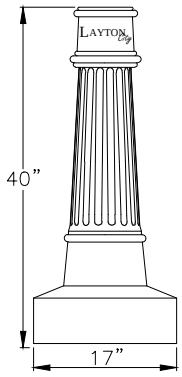

BASE DETAIL

DRAWN BY MTL	Layton City	STANDARD DRAWING
SCALE NONE		SL-04 SINGLE LIGHT FLUTED
DATE 5/11		
REVISIONS 07/13		ST-LT-06

SEE ST-LT-08 FOR REQURIED CONCRETE BASE DETAIL. ALL LIGHT POLES INSTALLED WITHIN UDOT RIGHT-OF-WAY "CLEAR ZONE" (UDOT DD18) MUST HAVE A BREAKAWAY BASE (UDOT SL11) AND USE PRE-CAST POLYMER CONCRETE JUNCTION BOXES

ARTERIAL STREET LIGHT
CONDUIT AND POWER LAYOUT

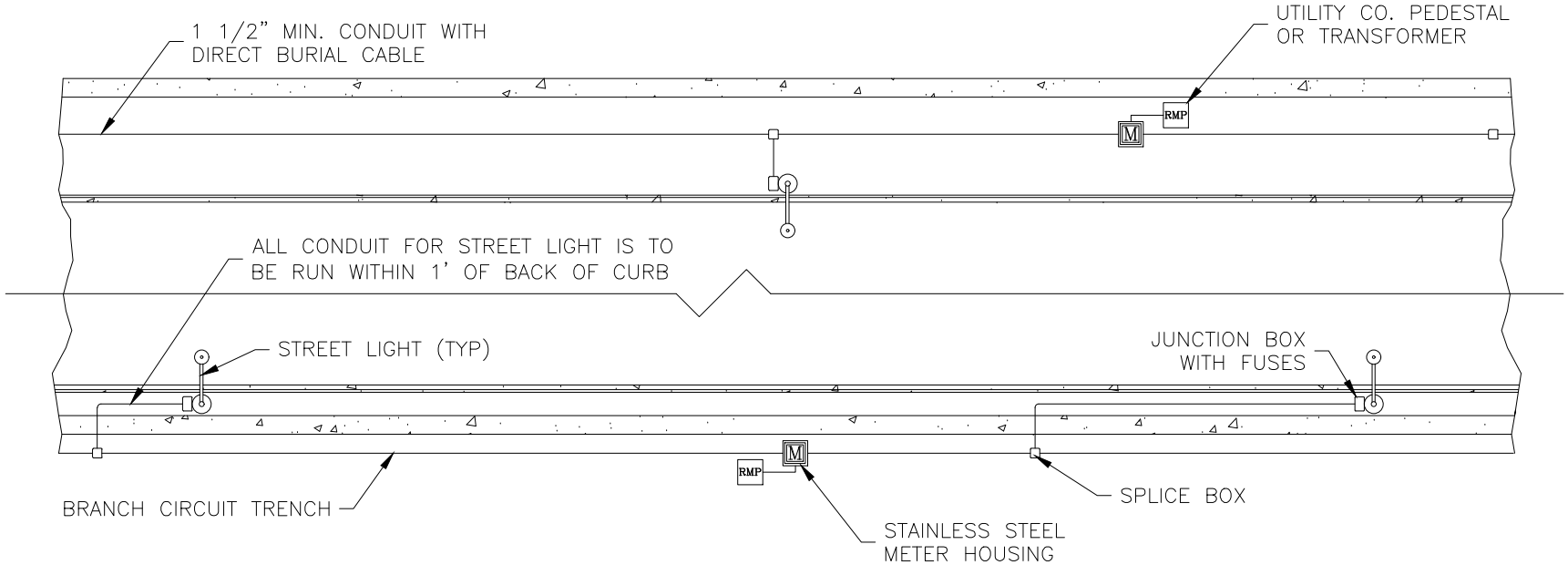

NOTES:

1. ALL STREET LIGHT CABLE SHALL BE DIRECT BURIAL CABLE IN CONDUIT 1 1/2" MINIMUM SCHEDULE 40 GRAY NON-CONDUCTIVE PVC.

2. IF TRENCH REPAIR IS IN A ROADWAY OR PAVED TRAIL THE REPAIR WILL BE AS PER LAYTON CITY EXCAVATION PERMIT SPECIFICATION.

3. INGROUND BOXES LOCATED WITHIN 20' OF APPROACHES AND INTERSECTIONS SHALL BE CARSON H SERIES H1324.

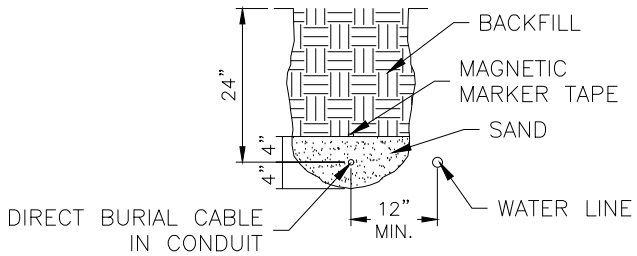

DETAIL—COMMERCIAL BRANCH CIRCUIT TRENCH

DRAWN BY MTL	Layton City	STANDARD DRAWING
SCALE NONE		ARTERIAL STREET LIGHT
DATE 5/11		ST-LT-07
REVISIONS 1/12		

STREET LIGHTS UNDERGROUND

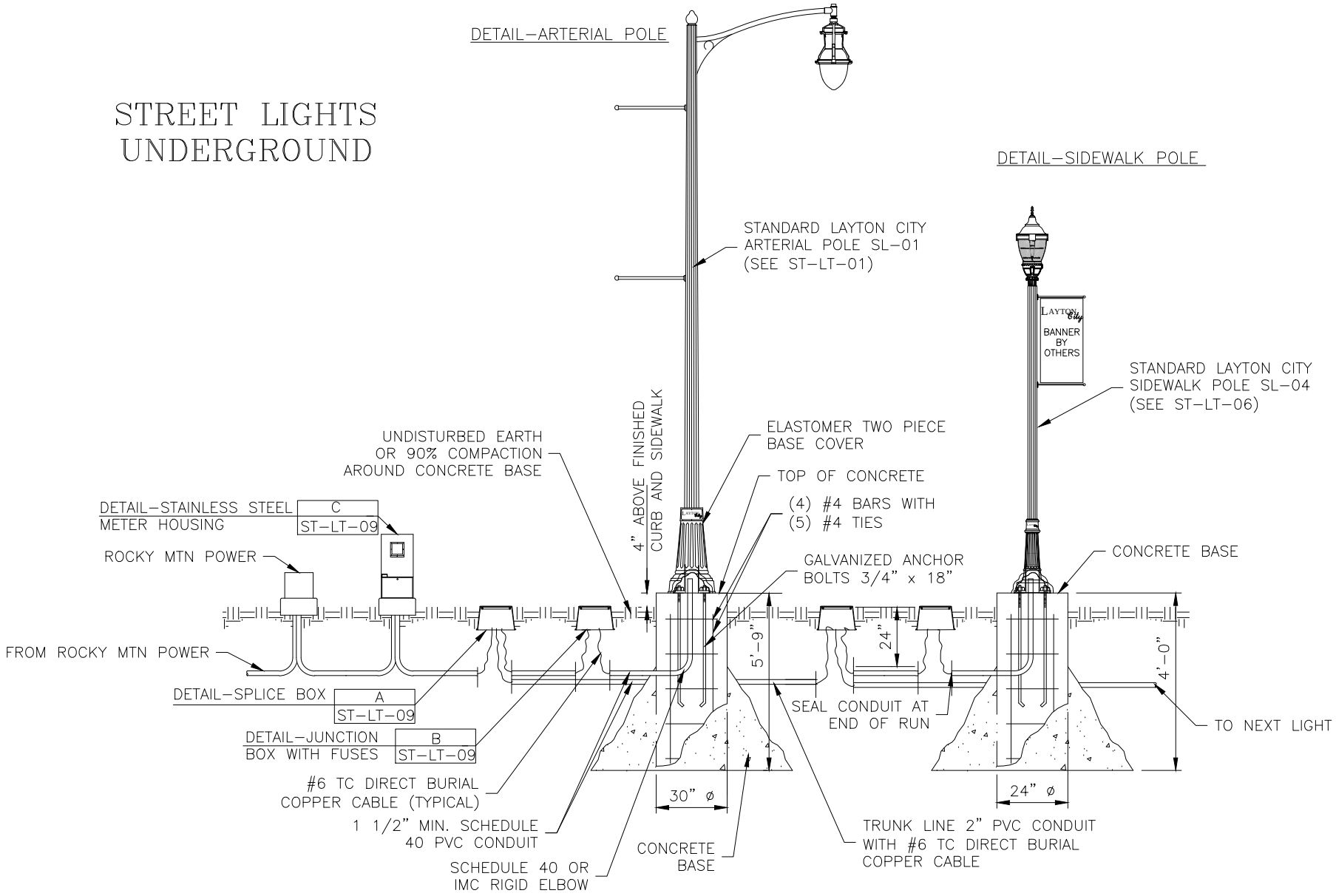

DRAWN BY MTL	Layton City	STANDARD DRAWING
SCALE NONE		STR LIGHTS UNDER
DATE 5/11		ST–LT–08
REVISIONS 1/12		

ARTERIAL STREET LIGHTS
UNDERGROUND NOTES & DETAILS

NOTES:

1. CONTRACTORS SHALL FOLLOW LAYTON CITY INSTALLATION AND INSPECTION PROCEDURE FOR LIGHT POLES AND LIGHT FIXTURES BEFORE ACCEPTANCE.

2. STREET LIGHT POLES SHALL BE LOCATED AS INDICATED ON THE APPROVED LIGHTING SITE PLAN, AND INSTALLED AS DESCRIBED IN THE CITY STANDARDS.

3. EACH STREET LIGHT ASSEMBLY SHALL HAVE A JUNCTION BOX WITH COVER MARKED "STREET LIGHTING" WITH FUSES.

4. FUSE HOT WIRES IN JUNCTION BOXES; SUPPLY SPLICE KIT FOR NEUTRAL WIRE.

5. INSTALL GRAY NON-CONDUCTIVE PVC 1 1/2" MIN. CONDUITS WITH 24" COVER AND SAND BEDDING.

6. CONTRACTOR TO INSTALL METER CABINET STRONG BOX WITH BREAKER PANEL. BOX TO BE LOCATED MIN. 8" FROM UTILITY CO. TRANSFORMER OR SECONDARY BOX.

7. BALANCE LOADS ACROSS PHASES FOR 120 V RECEPTACLES.

8. VIBRATED 4000 PSI CONCRETE @ 28 DAYS (6.5 CITY MIX).

9. ANY DISTURBED MATERIAL WITHIN 8' OF POLE FOUNDATION SHALL BE COMPACTED TO 90% OR GREATER.

10. UNDISTURBED NATIVE GRAVEL-SANDY GRAVEL ASSUMED. IF DIFFERENT, CONTACT CITY ENGINEER.

11. USE A 30" DIA. SONO TUBE.

12. LIGHTING LAYOUT MUST BE SHOWN ON AS-BUILTS.

13. GROUND AND NEUTRAL SHALL BE SEPARATE.

14. IF DEPTH CANNOT BE MET, MASS MUST BE EQUIVALENT TO MASS AS SHOWN

15. REBAR AND TRENCH MUST BE INSPECTED PRIOR TO CONCRETE POUR.

16. ALL SPECIFICATIONS FOR WIRE, CONDUIT, FUSE KITS, SPLICE KITS, JUNCTION BOXES AND CONNECTORS MUST BE SUBMITTED TO THE CITY ENGINEER FOR APPROVAL PRIOR TO ANY WORK BEING PERFORMED.

17. ALL CONDUCTORS SHALL BE OKONITE-FMR TYPE TC-CABLE #112-10-4054; OKONITE X-OLENE OKOSEAL #112-31-3747; OR ANIXTER VNTC #3H-0603 COPPER ONLY

18. FUSE HOLDERS SHALL BE IN-LINE, WATER TIGHT LEC-AA FOR ARTERIAL POLES.

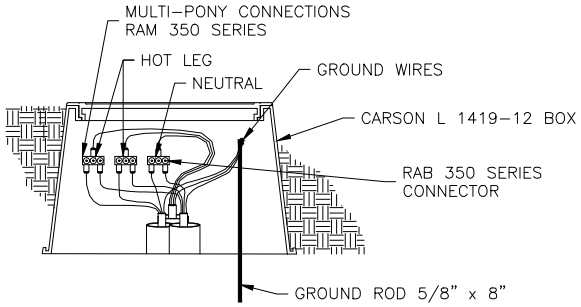

A DETAIL-SPLICE BOX
SCALE: NO SCALE

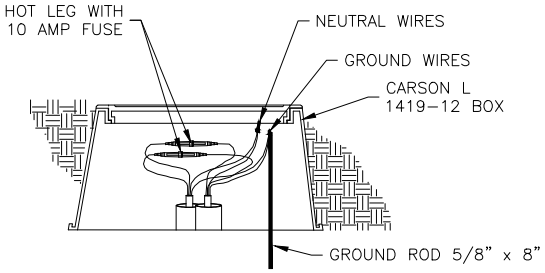

B DETAIL-JUNCTION BOX WITH FUSES
SCALE: NO SCALE

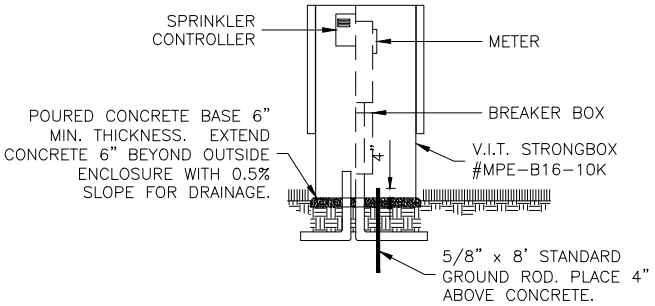

C DETAIL-STAINLESS STEEL METER HOUSING
SCALE: NO SCALE

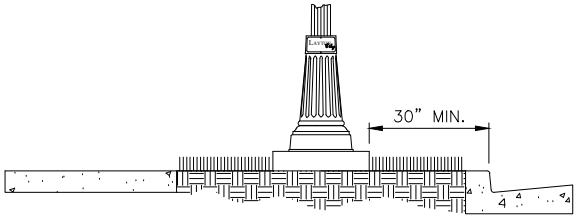

D DETAIL-POLE SPACING FROM FACE OF CURB
SCALE: NO SCALE

DRAWN BY MTL	Layton City	STANDARD DRAWING
SCALE NONE		ARTERIAL STR LIGHTS UNDER
DATE 5/11		ST-LT-09
REVISIONS 1/12		

SINGLE STREET LIGHT INSTALLATION

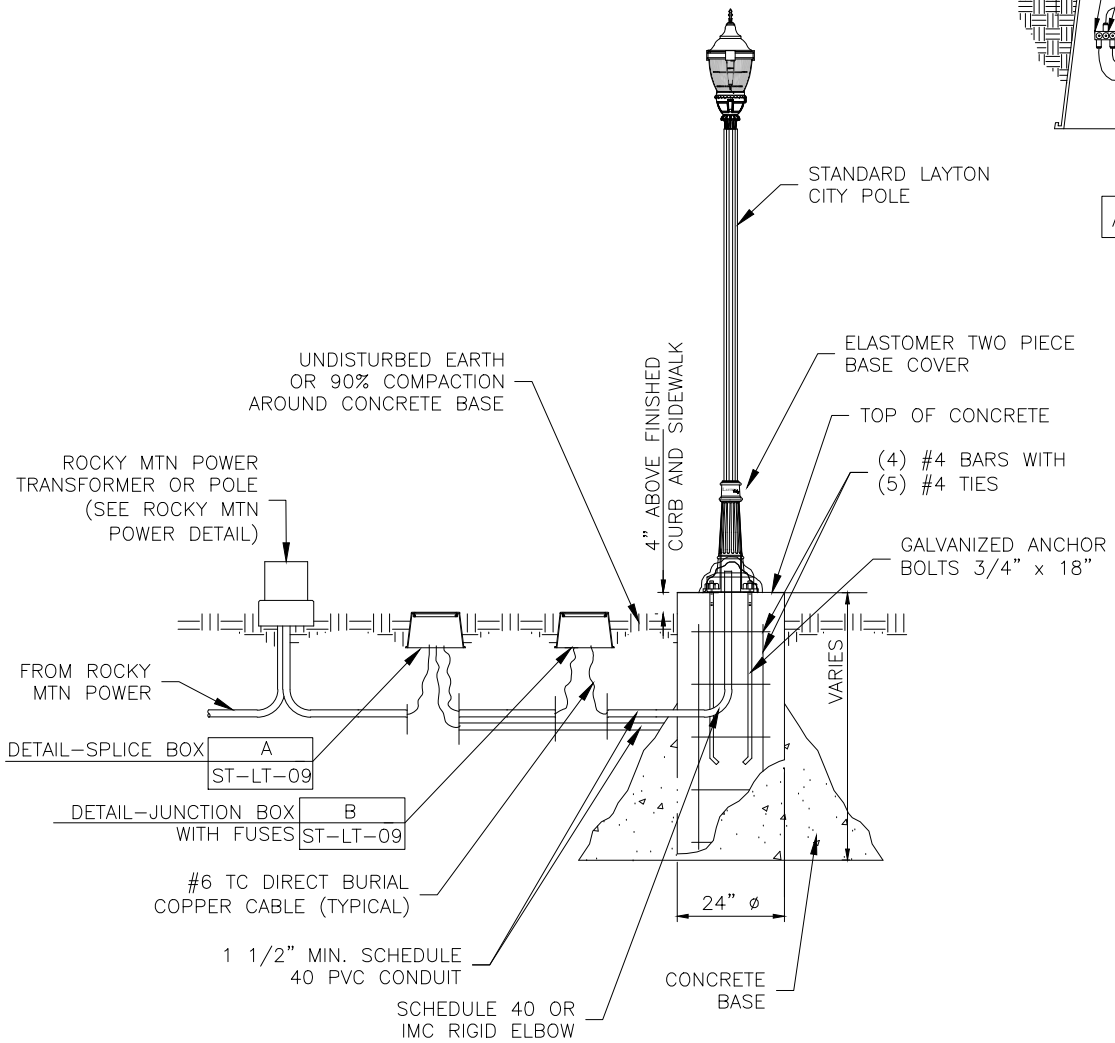

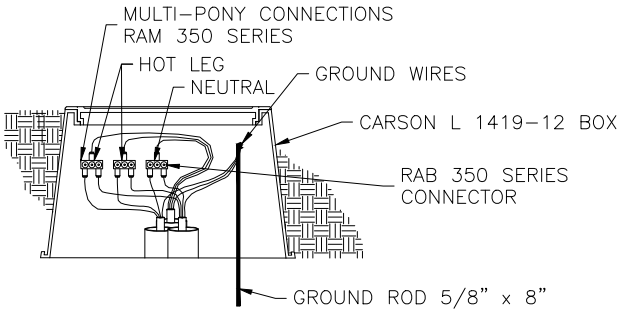

A DETAIL–SPLICE BOX
SCALE: NO SCALE

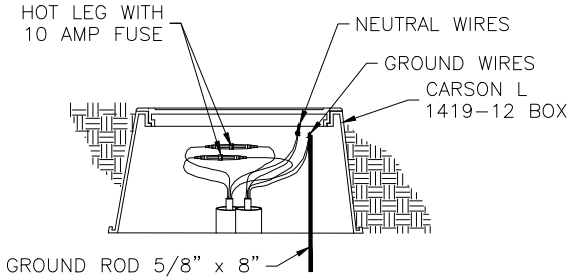

B DETAIL–JUNCTION BOX WITH FUSES
SCALE: NO SCALE

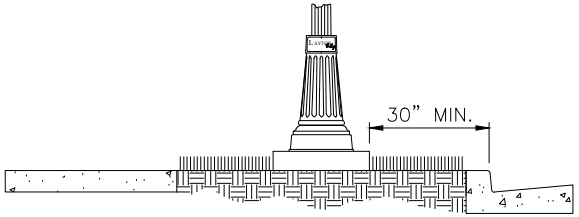

D DETAIL–POLE SPACING FROM FACE OF CURB
SCALE: NO SCALE

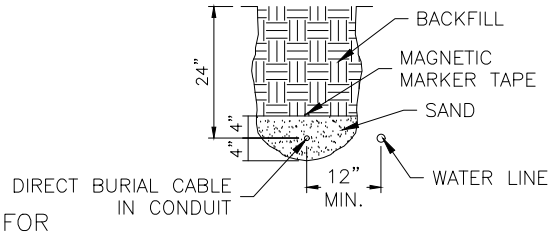

DETAIL–COMMERCIAL BRANCH CIRCUIT TRENCH

SEE SHEET ST–LT–09 FOR GENERAL NOTES ON STREET LIGHT INSTALLATION.

DRAWN BY MTL	Layton City	STANDARD DRAWING
SCALE NONE		SINGLE LIGHT INSTALL
DATE 10/12		ST–LT–10
REVISIONS		

Streetlight Point-of-Disconnect Diagram

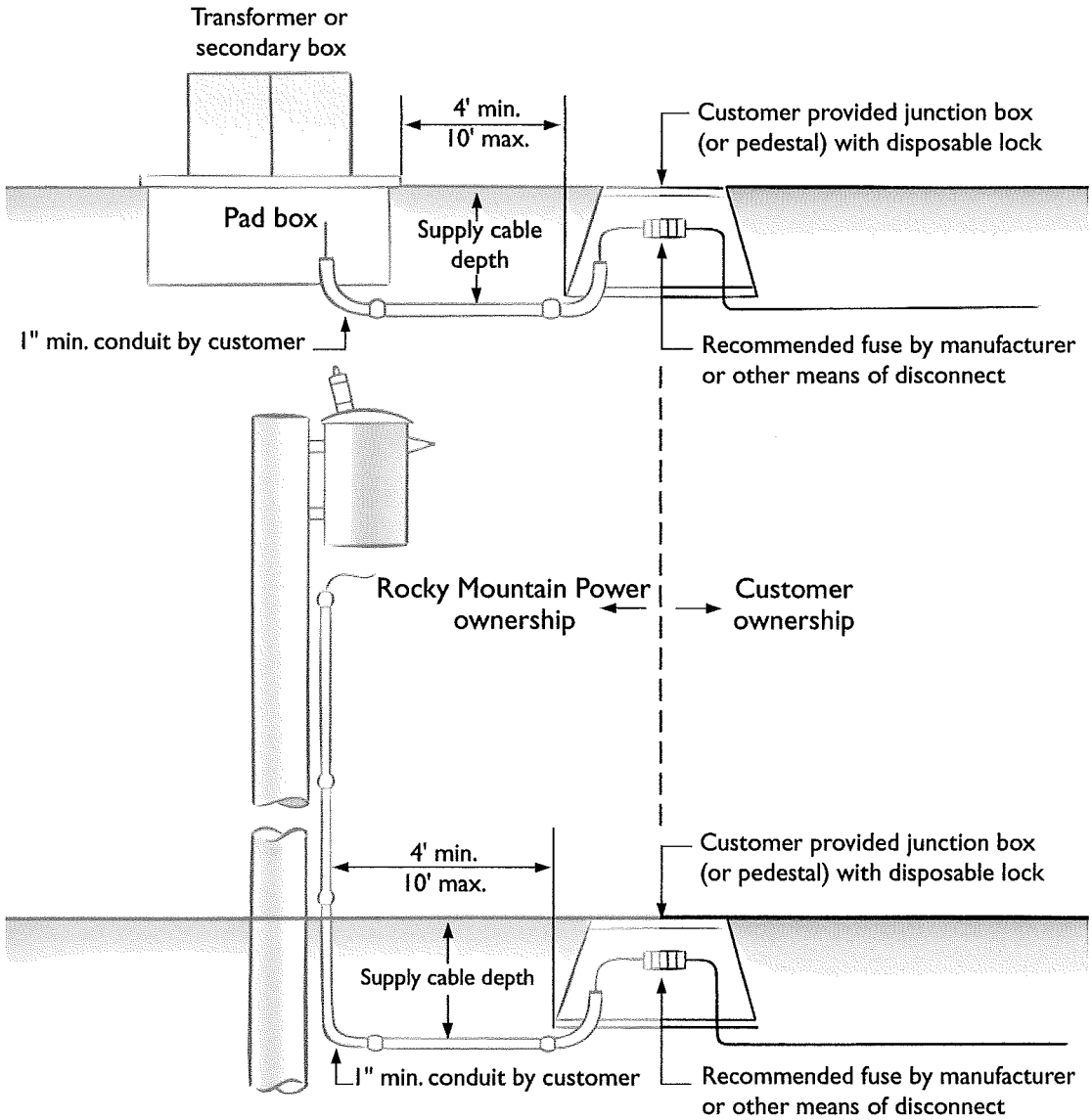

Customer is responsible for:

- Providing and installing a junction box or pedestal, conduit, fusing and customer-owned wire. The junction box or pedestal must be strong enough for incidental traffic areas
- Coordinating with Rocky Mountain Power on junction box or pedestal location and all digging within the vicinity of Rocky Mountain Power facilities
- Ensuring that construction of new or remodeled installations conform to applicable provisions of the NEC State Rules, as well as city and county codes

Rocky Mountain Power is responsible for:

- Installing and connecting wire from Rocky Mountain Power facilities to the point of disconnect.

ROCKY MOUNTAIN POWER