STANDARD PLANS
FOR STORM DRAIN

APRIL 2016

James Woodruff, City Engineer
Shannon Hansen, Assistant City Engineer – Development
Stephen Jackson, Assistant City Engineer – Capital Projects
Staff Engineers: Ryan Bankhead, Ashley Thoman, Mark Stenquist, Stacy Majewski, Amy Bean

STORM DRAIN DRAWINGS INDEX

DETAIL NAME	ABBREV.	PAGE #
Location of Storm Drain Pipe	SD-LOC	ST-SD-01
Inlet Box – 15” Pipe	15” IB	ST-SD-02
Double Inlet Box Curb & Gutter Location	DIB	ST-SD-03
Gutter Inlet Box	GTRINLET	ST-SD-04
Manhole Inlet	MH-INLET	ST-SD-05
5’ X 4’ Inlet Box	5X4INLET	ST-SD-06
Bicycle Safe Inlet Grate	BIKEGRATE	ST-SD-07
Cleanout Box – 12”, 15”, or 18” Pipe	12”-18” CO BOX	ST-SD-08
Cleanout Box – 21” – 30” Pipe	21”-30” CO BOX	ST-SD-09
Cleanout Box – 36” – 42” Pipe	36”-42” CO BOX	ST-SD-10
Cleanout Box – 48” Pipe	48” CO BOX	ST-SD-11
Cleanout Box with Manhole Lid	CO-MH-LID	ST-SD-12
Combination Cleanout Box/Inlet Box	COMBO	ST-SD-13
Combination Cleanout Box/Double Inlet Box	COMBO-DI	ST-SD-14
Irrigation Diversion Box	IRR-CO	ST-SD-15
Detention Pond Inlet/Outlet Structure	I/O STRUCTURE	ST-SD-16
Storm Drain & Land Drain Manhole	SDMH	ST-SD-17
Manhole Cover	SDMH-LID	ST-SD-18
Footing and Foundation Subdrain	FOOTING	ST-SD-19
Pond Berm Cross Section	POND BERM	ST-SD-20
Storm Drain Detention Basin Sprinkling System	SDBASIN SPRINKLER	ST-SD-21
Combination Cleanout/Inlet Box in Waterway	COMBO-WWY	ST-SD-22
Inlet Box – 15” Pipe (Stub to IRR Ditch)	IB – DITCH	ST-SD-23
8” Drain Line Installation for Slope Stabilization/Dewatering	8” PERF	ST-SD-24

LOCATION OF STORM DRAIN PIPE

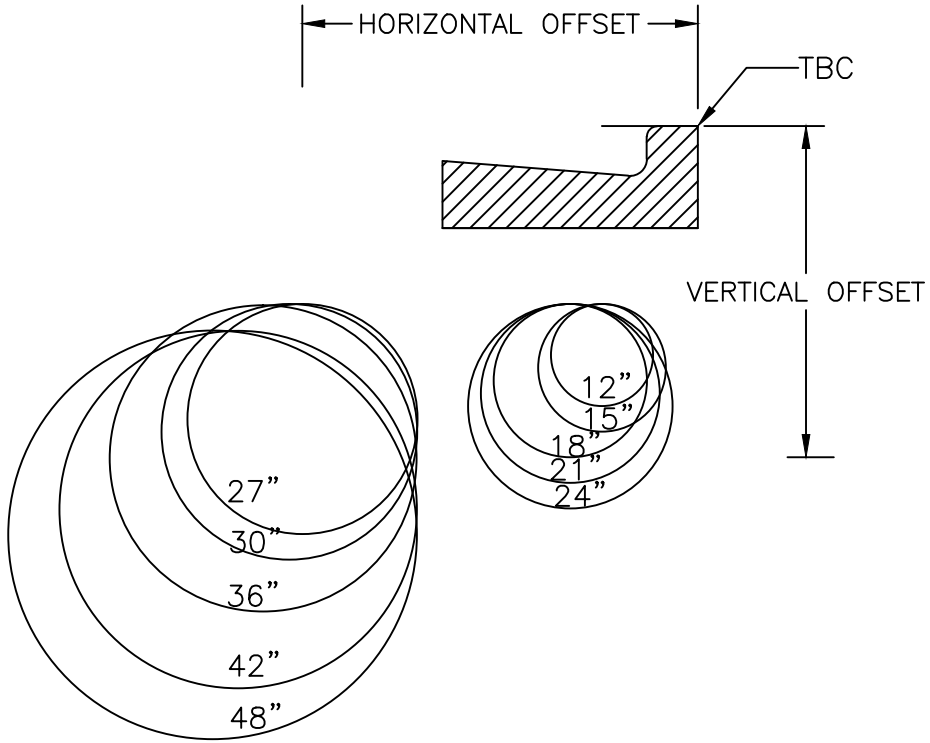

PIPE DIAMETER	HORIZONTAL OFFSET FROM TBC TO CL OF PIPE (FT.)	MIN VERTICAL OFFSET FROM TBC (FT.) TO FL OF PIPE
12”	0.94	2.75
15”	0.94	3.00
18”	1.25	3.25
21”	1.25	3.50
24”	1.25	3.75
27”	3.87	4.00
30”	4.00	4.25
36”	4.25	4.75
42”	4.50	5.50
48”	4.75	6.00

DRAWN BY DHR	Layton City	STANDARD DRAWING SD–LOC
SCALE NONE		
DATE 3/96		ST–SD–01
REVISIONS 5/12		

INLET BOX – 15" PIPE

CURB & GUTTER PLAN

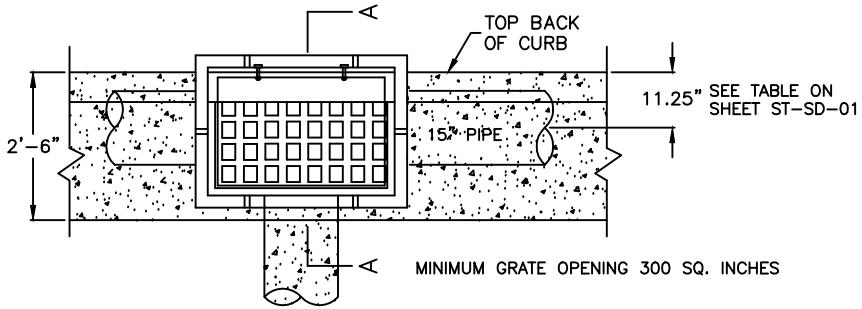

WATERWAY PLAN

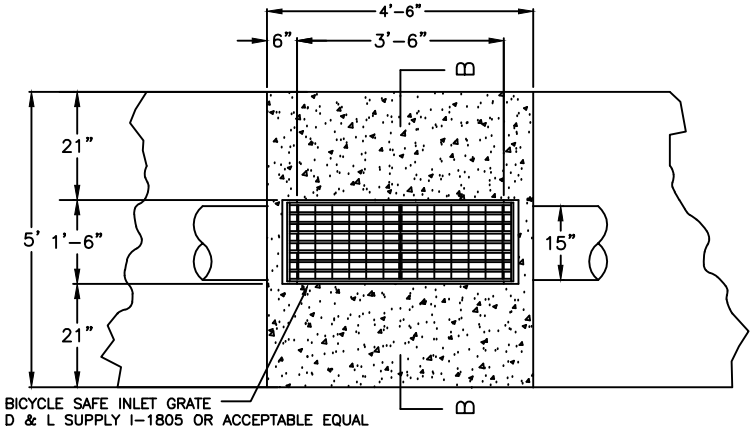

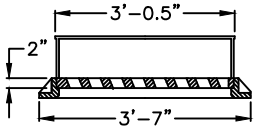

INLET FRAME AND GRATE WITH ADJUSTABLE CURB BOX (OLYMPIC FOUNDRY 1-3517 OR ACCEPTABLE EQUAL)

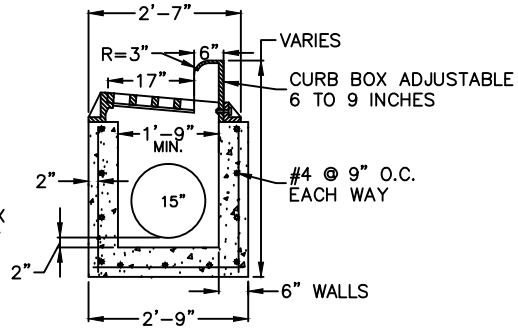

SECTION A

*INTERIOR BOX SIZE 1'-9" X 36"

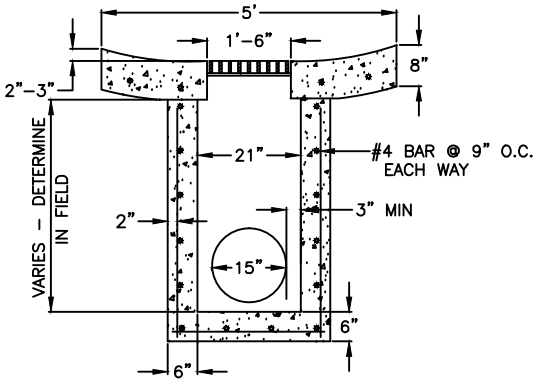

SECTION B

NOTES:

1. ALL REINFORCEMENT SHALL BE #4 DEFORMED STEEL, GRADE 60. KSI PER APWA 03 20 00.

2. ALL REINFORCEMENT SHALL BE PLACED AT 9" O.C. EACH WAY IN THE FLOOR AND THE WALLS.

3. THE ADJUSTABLE CURB BOX INLET GRATE SHALL BE BICYCLE SAFE (OLYMPIC FOUNDRY I-3517 OR ACCEPTABLE EQUAL)

3A. THE WATERWAY INLET GRATE SHALL BE BICYCLE SAFE AND SHALL BE SET ON 3"x3"x1/2" ANGLE IRON SUPPORTS CAST IN EACH END OF THE BOX (D&L SUPPLY I-1805 OR ACCEPTABLE EQUAL) (SEE LEDGE DETAIL).

4. CONCRETE SHALL BE CLASS 4,000 PER APWA 03 30 04.

5. ALL PIPES IN THE BOX SHALL BE CUT WITH THE INTERIOR OF THE BOX AND GROUTED SMOOTH.

6. REBAR SHALL HAVE 2" CLEAR ON EARTH SIDE OF THE STRUCTURE.

7. IF PRECAST BOX HAS BEEN ALLOWED, A CONCRETE COLLAR SHALL BE POURED AT ALL CONNECTIONS.

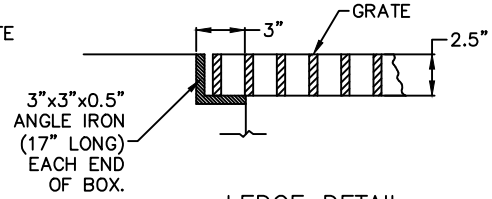

LEDGE DETAIL

WATERWAY INLET GRATE

DRAWN BY DHR	Layton City	STANDARD DRAWING 15" IB
SCALE NONE		
DATE 3/96		ST-SD-02
REVISIONS 3/03		

DOUBLE INLET BOX
CURB & GUTTER LOCATION

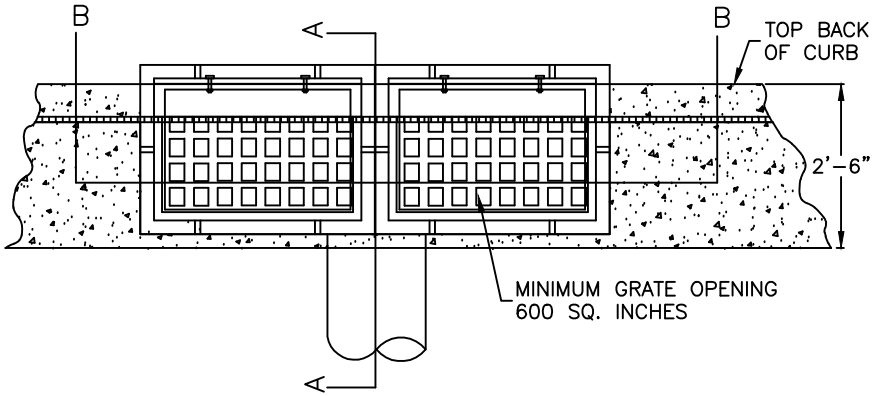

PLAN – DOUBLE INLET

NOTES:

1. ALL REINFORCEMENT SHALL BE #4 DEFORMED STEEL, GRADE 60. KSI PER APWA 03 20 00.

2. ALL REINFORCEMENT SHALL BE PLACED AT 9" O.C. EACH WAY IN THE FLOOR AND THE WALLS.

3. THE ADJUSTABLE CURB BOX INLET GRATE SHALL BE BICYCLE SAFE (OLYMPIC FOUNDRY I–3517 OR ACCEPTABLE EQUAL).

4. CONCRETE SHALL BE CLASS 4,000 PER APWA 03 30 04.

5. ALL PIPES IN THE BOX SHALL BE CUT AND GROUTED SMOOTH.

6. REBAR SHALL HAVE 2" CLEAR ON EARTH SIDE OF STRUCTURE.

7. IF PRECAST BOX ALLOWED, A CONCRETE COLLAR SHALL BE POURED AT ALL CONNECTIONS.

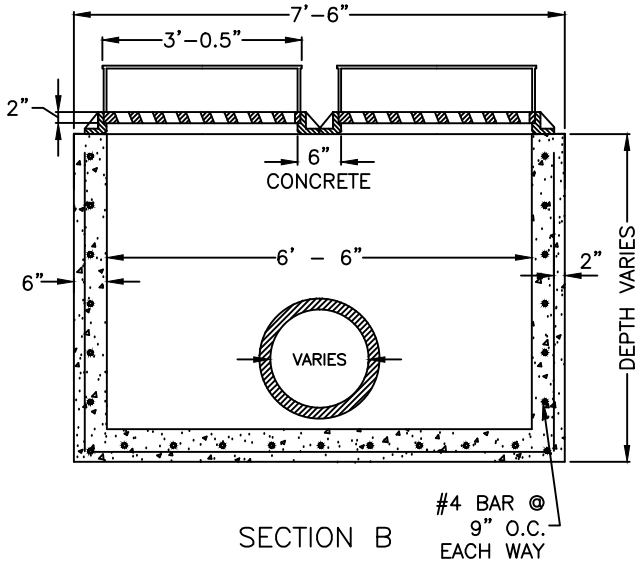

SECTION B

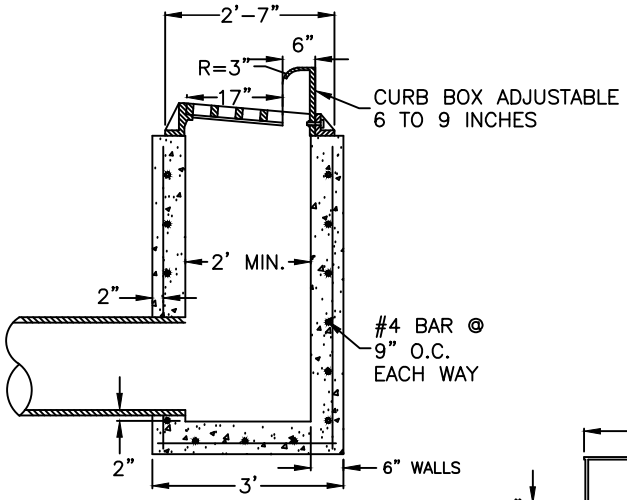

SECTION A

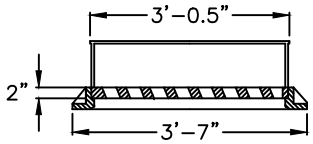

INLET FRAME AND GRATE
WITH ADJUSTABLE CURB BOX
(OLYMPIC FOUNDRY 1–3517
OR ACCEPTABLE EQUAL)

DRAWN BY DHR	Layton City	STANDARD DRAWING DIB
SCALE NONE		
DATE 3/96		ST–ST–03
REVISIONS 10/97		

GUTTER INLET BOX

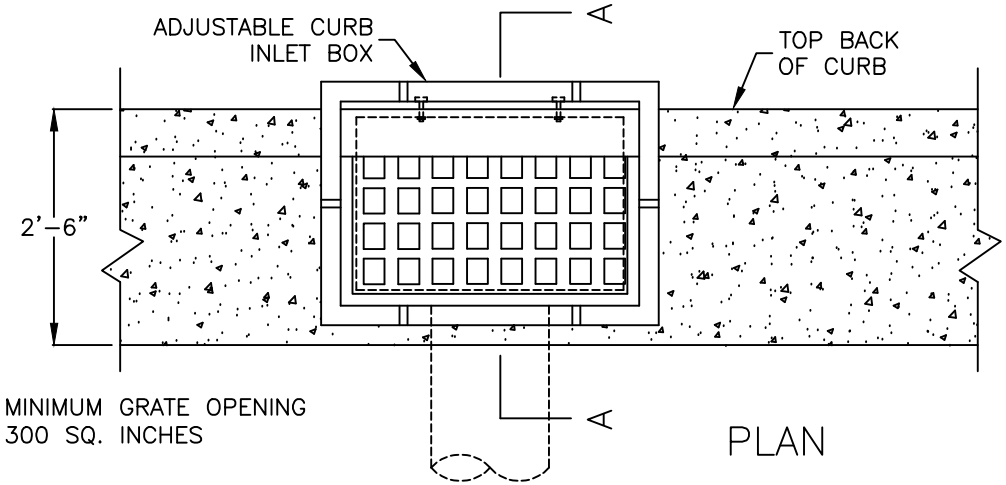

PLAN

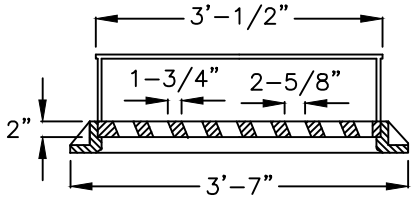

INLET FRAME AND GRATE
WITH ADJUSTABLE CURB BOX
(OLYMPIC FOUNDRY I-3517
OR ACCEPTABLE EQUAL)

*INTERIOR BOX SIZE 1'-8½" X 36"
(PIPES 30 INCHES AND SMALLER)

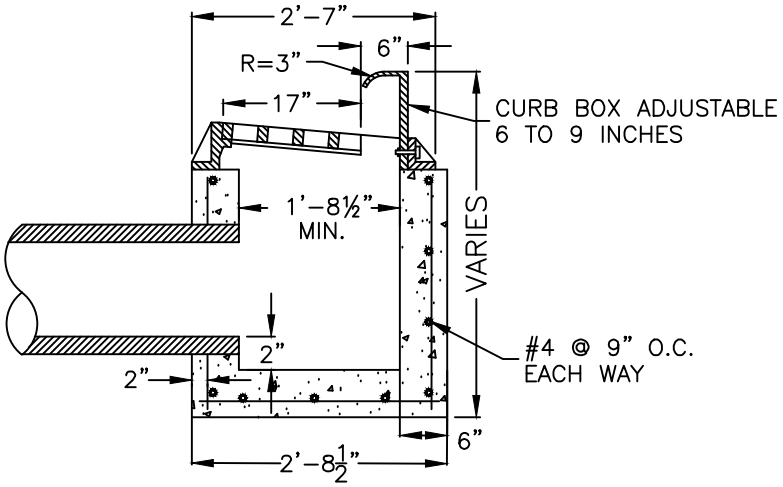

SECTION A

NOTES:

1. ALL REINFORCEMENT SHALL BE #4 DEFORMED STEEL, GRADE 60.KSI PER APWA 03 20 00.

2. ALL REINFORCEMENT SHALL BE PLACED AT 9" O.C. EACH WAY IN THE FLOOR AND THE WALLS.

3. THE ADJUSTABLE CURB BOX INLET GRATE SHALL BE BICYCLE SAFE (OLYMPIC FOUNDRY I-3517 OR ACCEPTABLE EQUAL),

4. CONCRETE SHALL BE CLASS 4,000 PER APWA 03 30 04.

5. ALL PIPES IN THE BOX SHALL BE CUT WITH THE INTERIOR OF THE BOX AND GROUTED SMOOTH.

6. REBAR SHALL HAVE 2" CLEAR ON EARTH SIDE OF THE STRUCTURE.

7. IF PRECAST BOX HAS BEEN ALLOWED, A CONCRETE COLLAR SHALL BE POURED AT ALL CONNECTIONS.

DRAWN BY DHR	Layton City	STANDARD DRAWING GTRINLET
SCALE NONE		
DATE 3/96		
REVISIONS 10/97		ST-SD-04

MANHOLE INLET

WITH INLET GRATE COVER
CURB & GUTTER LOCATION

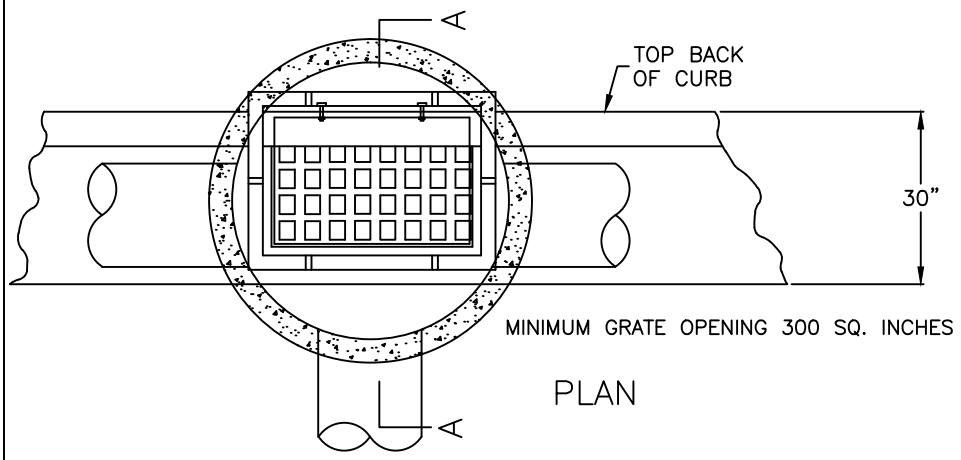

PLAN

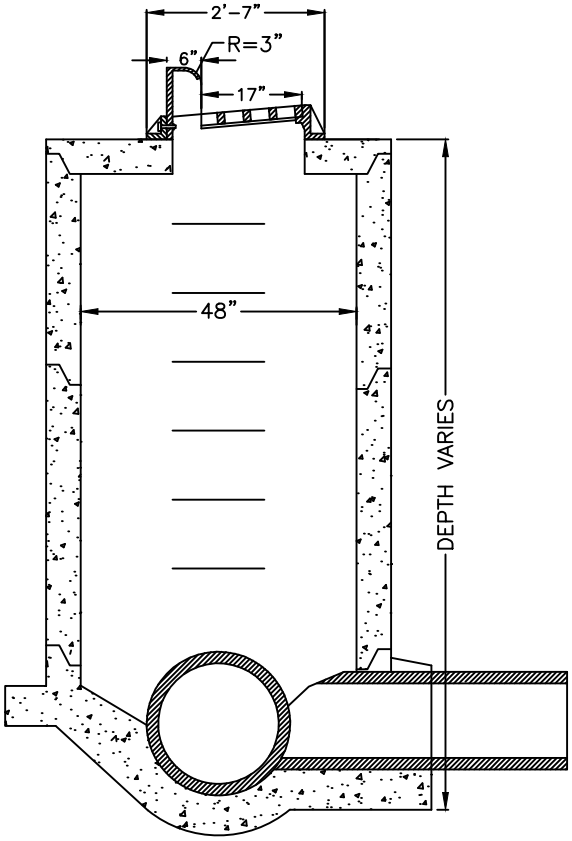

SECTION A

SEE DRAWING "ST-SD-17" FOR
MANHOLE CONSTRUCTION DETAILS

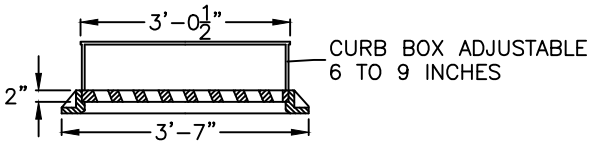

INLET FRAME AND GRATE
WITH ADJUSTABLE CURB BOX
(OLYMPIC FOUNDRY 1-3517
OR ACCEPTABLE EQUAL)

NOTES:

1. ALL REINFORCEMENT SHALL BE #4 DEFORMED STEEL, GRADE 60. KSI PER APWA 03 20 00.

2. ALL REINFORCEMENT SHALL BE PLACED AT 9" O.C. EACH WAY IN THE FLOOR AND THE WALLS.

3. THE ADJUSTABLE CURB BOX INLET GRATE SHALL BE BICYCLE SAFE (OLYMPIC FOUNDRY I-3517 OR ACCEPTABLE EQUAL).

4. CONCRETE SHALL BE CLASS 4,000 PER APWA 03 30 04.

5. ALL PIPES IN THE BOX SHALL BE CUT WITH THE INTERIOR OF THE BOX AND GROUTED SMOOTH.

6. REBAR SHALL HAVE 2" CLEAR ON EARTH SIDE OF THE STRUCTURE.

DRAWN BY DHR	Layton City	STANDARD DRAWING
SCALE NONE		MH-INLET
DATE 3/96		ST-SD-05
REVISIONS 10/97		

5' X 4' INLET BOX

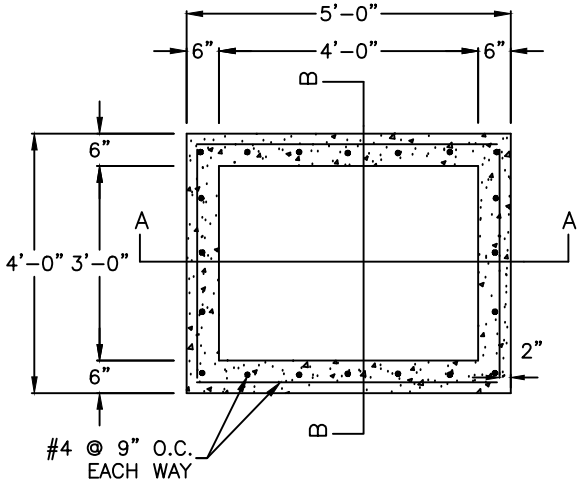

PLAN-INLET BOX

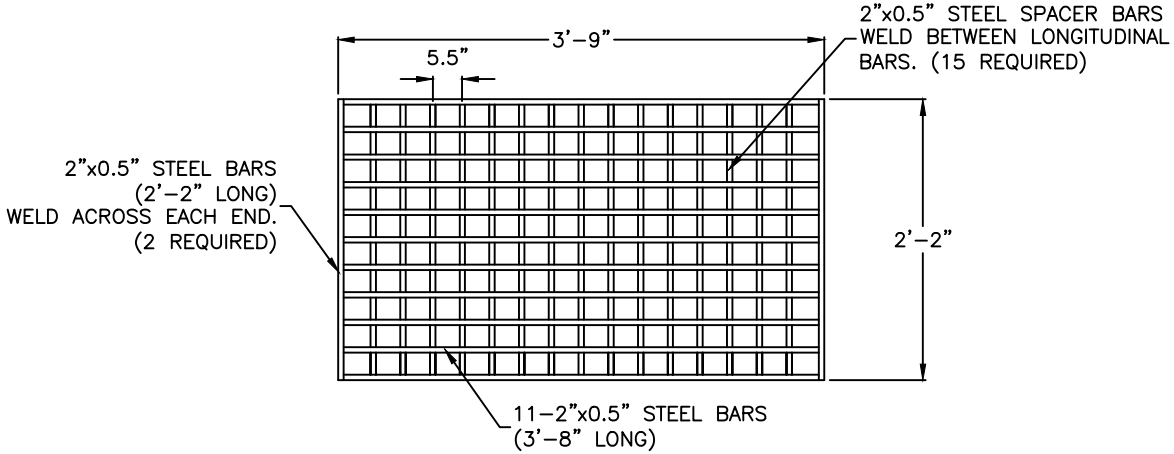

BICYCLE SAFE STEEL GRATING

(NOT TO SCALE)

NOTES:

1. ALL REINFORCEMENT SHALL BE #4 DEFORMED STEEL, GRADE 60 KSI PER APWA 03 20 00.

2. ALL REINFORCEMENT SHALL BE PLACED AT 9" O.C. EACH WAY IN THE FLOOR AND THE WALLS.

3. THE INLET GRATE SHALL BE SET ON 3"x3"x1/2" ANGLE IRON SUPPORTS CAST IN EACH END OF THE BOX.

4. CONCRETE SHALL BE CLASS 4,000 PER APWA 03 30 04.

5. ALL PIPES IN THE BOX SHALL BE CUT WITH THE INTERIOR OF THE BOX AND GROUTED SMOOTH.

6. REBAR SHALL HAVE 2" CLEAR ON EARTH SIDE OF THE STRUCTURE.

7. TO BE USED IN FIELDS OR PARKING LOT AREAS.

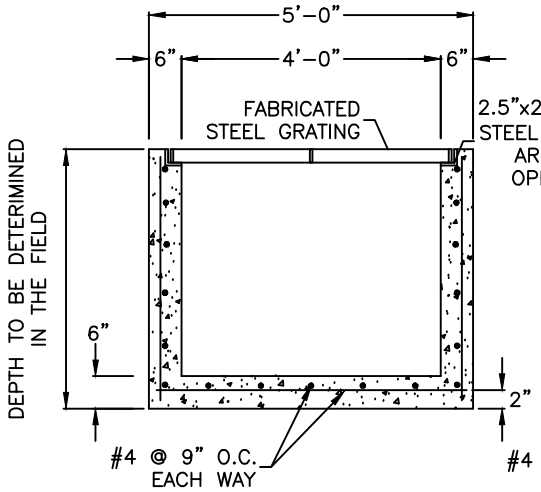

SECTION A

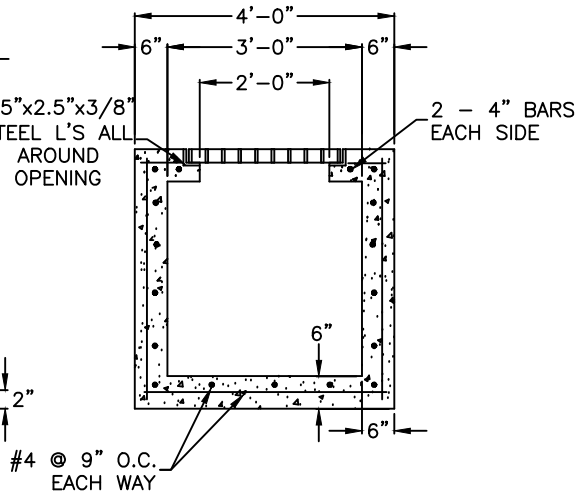

SECTION B

DRAWN BY DHR	Layton City	STANDARD DRAWING 5X4INLET
SCALE NONE		
DATE 11/93		ST-SD-06
REVISIONS		

BICYCLE SAFE INLET GRATE

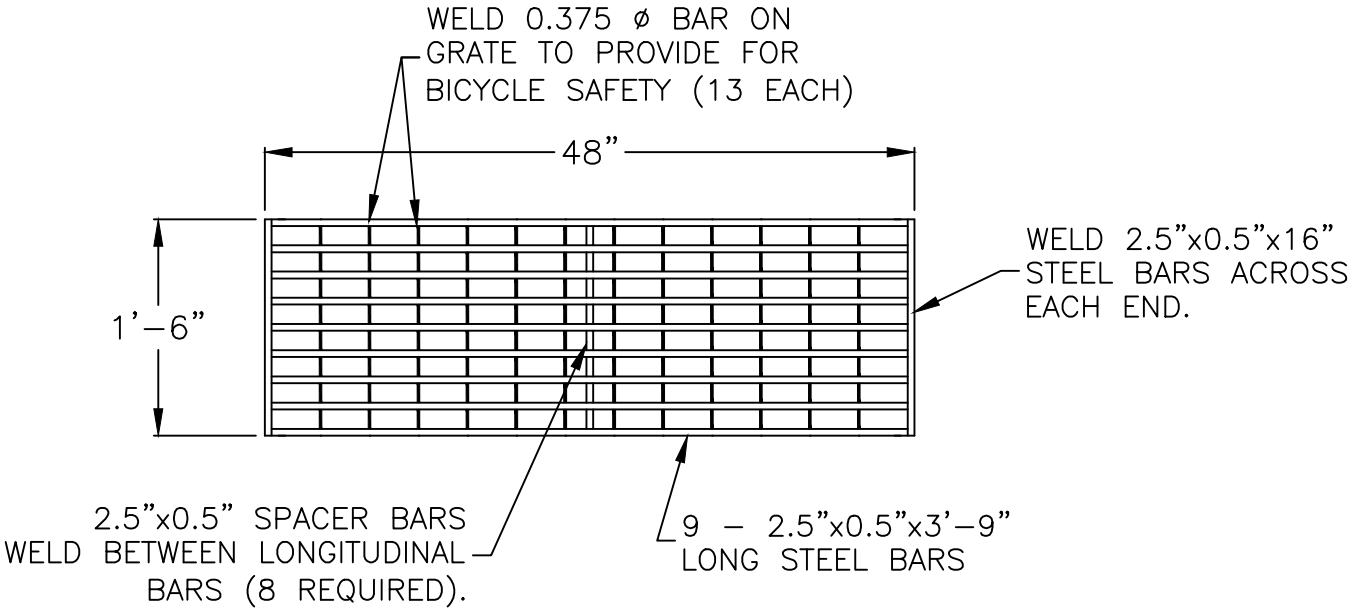

DETAILS – STEEL GRATE

RECTANGULAR FRAME AND GRATE
D&L SUPPLY I–1805 OR
ACCEPTABLE EQUAL

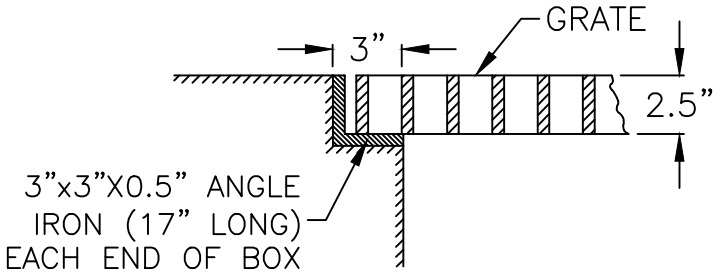

LEDGE DETAIL
WATERWAY INLET GRATE

DRAWN BY DHR	Layton City	STANDARD DRAWING
SCALE NONE		BIKEGRATE
DATE 10/97		ST–SD–07
REVISIONS		

CLEANOUT BOX – 12", 15" OR 18" PIPE

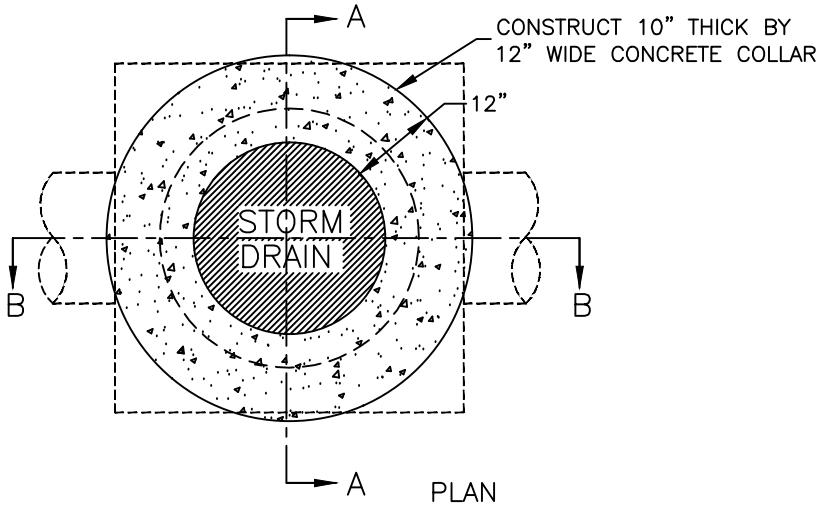

NOTES:

1. ALL REINFORCEMENT SHALL BE #4 DEFORMED STEEL, GRADE 60 KSI PER APWA 03 20 00.

2. ALL REINFORCEMENT SHALL BE PLACED AT 9 INCHES O.C. EACH WAY IN THE FLOOR AND WALLS.

3. THE MANHOLE FRAME AND COVER SHALL BE D & L SUPPLY MODEL A–1181 OR ACCEPTABLE EQUAL.

4. CONCRETE SHALL BE CLASS 4,000 PER APWA 03 30 04.

5. ALL PIPES IN THE BOX SHALL BE CUT FLUSH WITH THE INTERIOR OF THE BOX AND GROUTED SMOOTH.

6. REBAR SHALL HAVE 2" CLEAR ON EARTH SIDE OF STRUCTURE.

7. IF A PRECAST BOX HAS BEEN ALLOWED, A CONCRETE COLLAR SHALL BE POURED AT ALL CONNECTIONS.

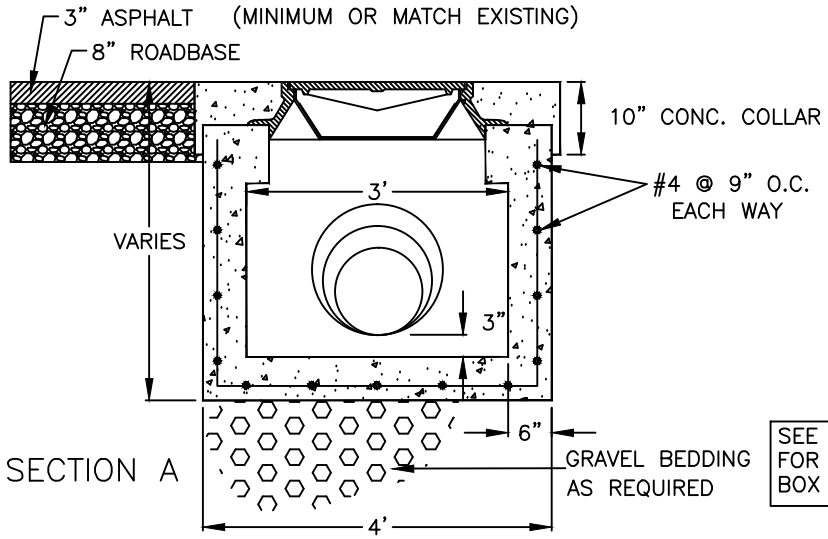

SECTION A

SEE ST–SD–01 STANDARD FOR MINIMUM DEPTH OF BOX FOR CONCRETE PIPE

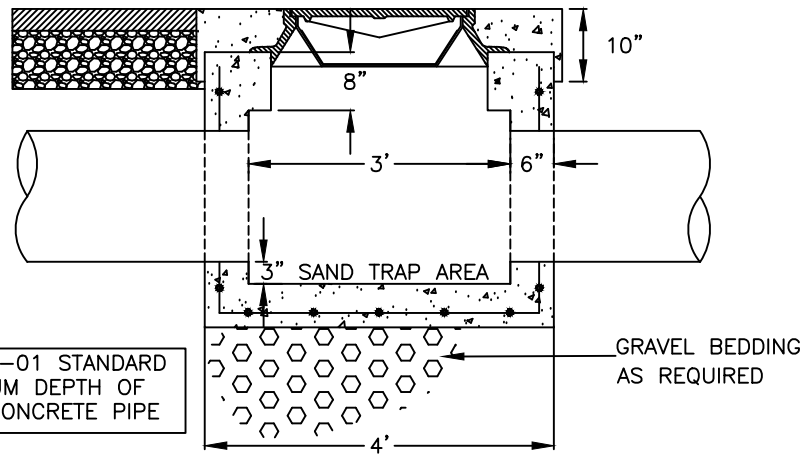

SECTION B

DRAWN BY DHR	Layton City	STANDARD DRAWING 12"–18" CO BOX
SCALE NONE		
DATE 6/05		ST–SD–08
REVISIONS		

CLEANOUT BOX – 21" – 30" PIPE

27" AND 30" PIPE

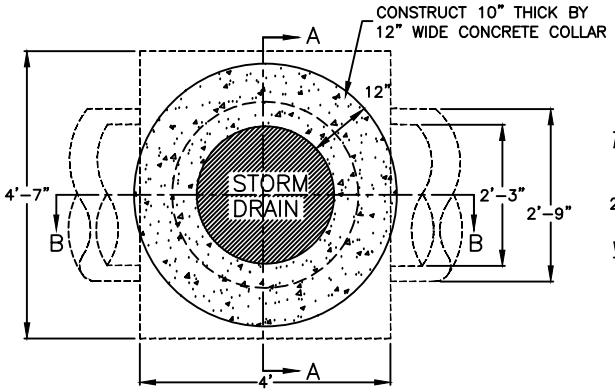

PLAN

21" AND 24" PIPE

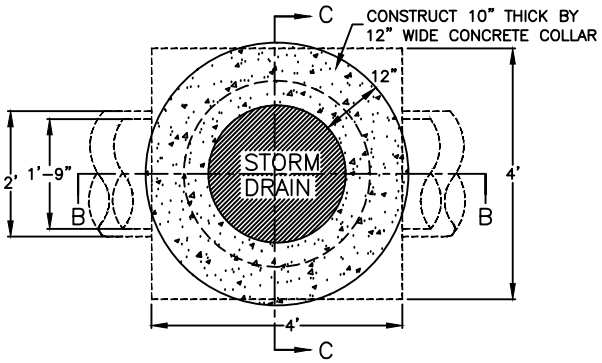

PLAN

NOTES:

1. ALL REINFORCEMENT SHALL BE #4 DEFORMED STEEL, GRADE 60 KSI PER APWA 03 20 00.

2. ALL REINFORCEMENT SHALL BE PLACED AT 9 INCHES O.C. EACH WAY IN THE FLOOR AND WALLS.

3. THE MANHOLE FRAME AND COVER SHALL BE D & L SUPPLY MODEL A–1181 OR ACCEPTABLE EQUAL.

4. CONCRETE SHALL BE CLASS 4,000 PER APWA 03 30 04.

5. ALL PIPES IN THE BOX SHALL BE CUT FLUSH WITH THE INTERIOR OF THE BOX AND GROUTED SMOOTH.

6. REBAR SHALL HAVE 2 INCHES CLEAR ON EARTH SIDE OF STRUCTURE.

7. IF A PRECAST BOX HAS BEEN ALLOWED, A CONCRETE COLLAR SHALL BE POURED AT ALL CONNECTIONS.

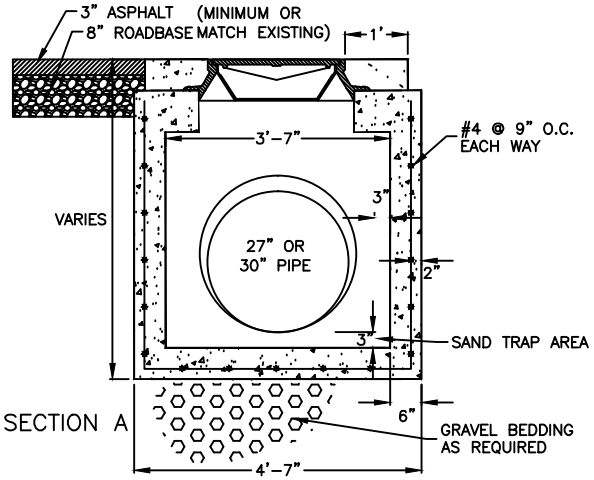

SECTION A

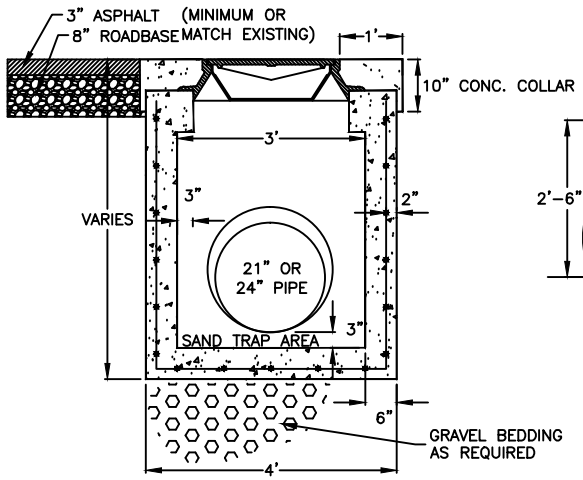

SECTION C

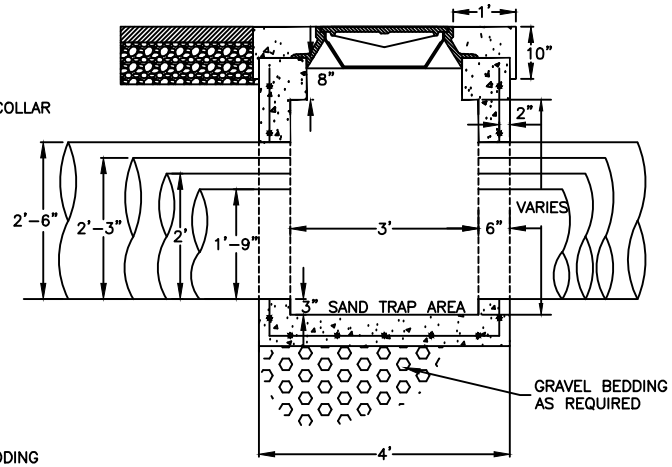

SECTION B

SEE ST–SD–01 STANDARD FOR MINIMUM DEPTH OF BOX FOR CONCRETE PIPE

DRAWN BY DHR	Layton City	STANDARD DRAWING
SCALE NONE		21"–30" CO BOX
DATE 8/05		ST–SD–09
REVISIONS		

CLEANOUT BOX – 36" – 42" PIPE

42" PIPE

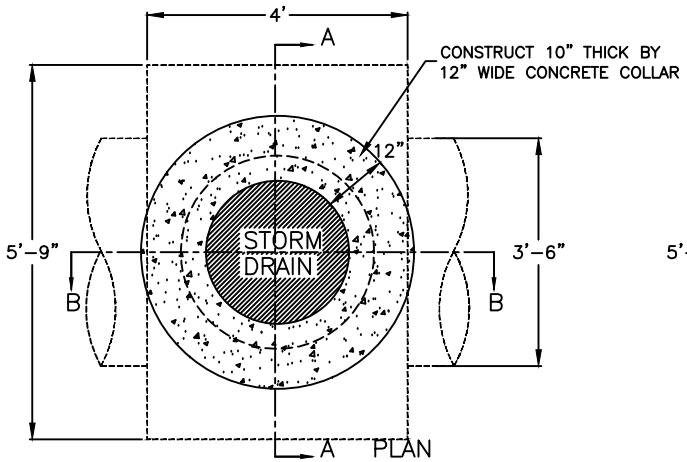

36" PIPE

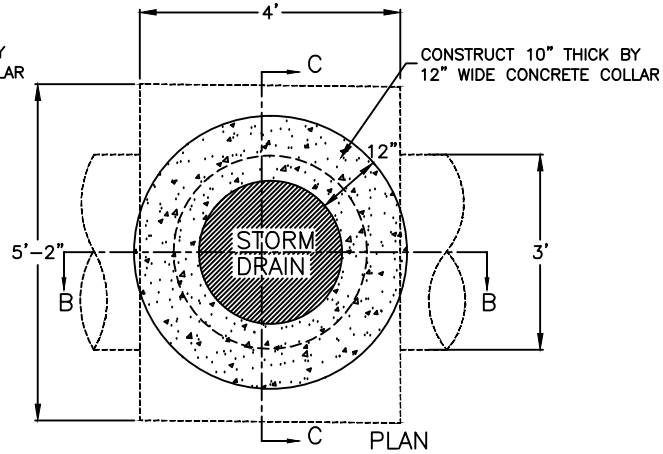

NOTES:

1. ALL REINFORCEMENT SHALL BE #4 DEFORMED STEEL, GRADE 60 KSI PER APWA 03 20 00.

2. ALL REINFORCEMENT SHALL BE PLACED AT 9 INCHES O.C. EACH WAY IN THE FLOOR AND WALLS.

3. THE MANHOLE FRAME AND COVER SHALL BE D & L SUPPLY MODEL A–1181 OR ACCEPTABLE EQUAL.

4. CONCRETE SHALL BE CLASS 4,000 PER APWA 03 30 04.

5. ALL PIPES IN THE BOX SHALL BE CUT FLUSH WITH THE INTERIOR OF THE BOX AND GROUTED SMOOTH.

6. REBAR SHALL HAVE 2 INCHES CLEAR ON EARTH SIDE OF STRUCTURE.

7. IF A PRECAST BOX HAS BEEN ALLOWED, A CONCRETE COLLAR SHALL BE POURED AT ALL CONNECTIONS.

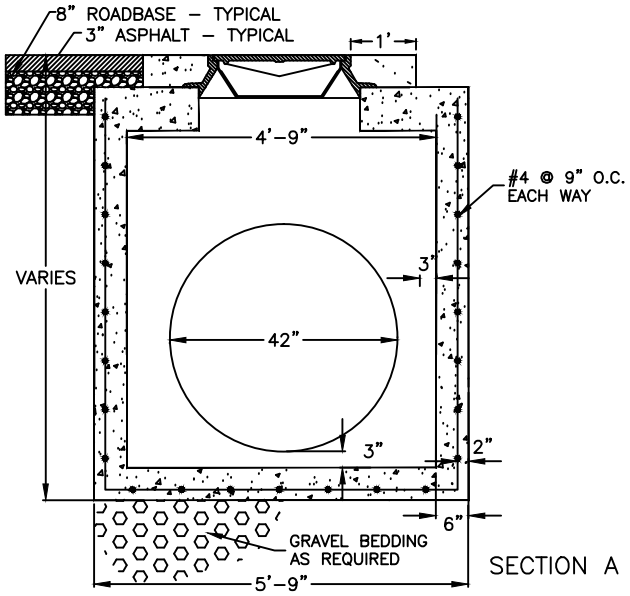

SECTION A

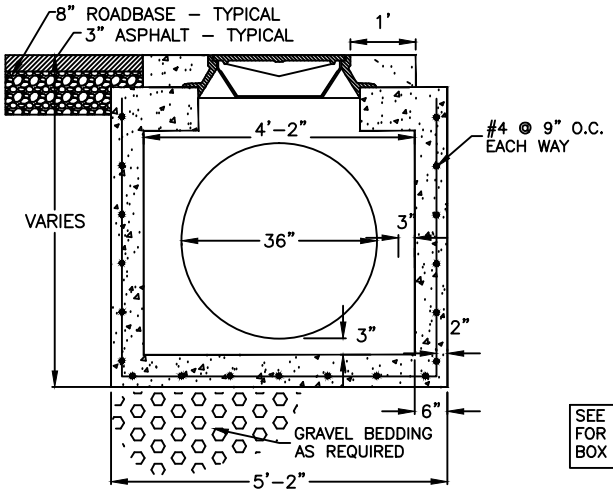

SECTION C

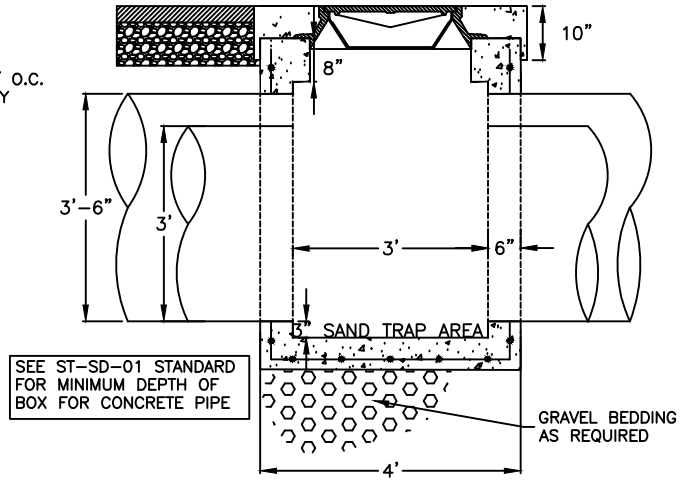

SEE ST–SD–01 STANDARD FOR MINIMUM DEPTH OF BOX FOR CONCRETE PIPE

SECTION B

DRAWN BY DHR	Layton City	STANDARD DRAWING
SCALE NONE		36"–42" CO BOX
DATE 8/05		
REVISIONS		ST–SD–10

CLEANOUT BOX – 48" PIPE

WITH MANHOLE COVER AND CONCRETE COLLAR

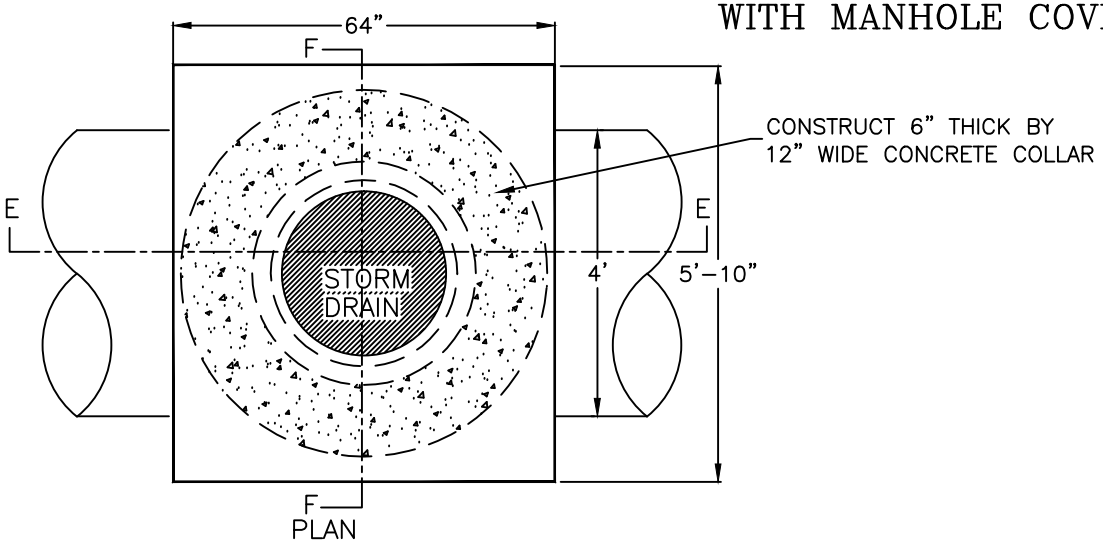

NOTES:

1. ALL STEEL REINFORCEMENT SHALL BE DEFORMED STEEL, GRADE 60 KSI PER APWA 03 20 00.

2. ALL REINFORCEMENT WILL BE PLACED AT 9" O.C. EACH WAY IN THE FLOOR AND THE WALLS.

3. THE CLEANOUT COVER SHALL BE MODEL A–1181 AS MANUFACTURED BY D&L SUPPLY OR EQUAL.

4. CONCRETE SHALL BE CLASS 4,000 PER APWA 03 30 04.

5. ALL PIPES IN THE BOX SHALL BE CUT FLUSH WITH THE INTERIOR OF THE BOX AND GROUTED SMOOTH.

6. REBAR SHALL HAVE 2 INCHES CLEAR ON EARTH SIDE OF STRUCTURE.

7. WALL AND FLOOR THICKNESS SHALL BE 8 INCHES THICK.

8. IF A PRECAST BOX HAS BEEN ALLOWED, A CONCRETE COLLAR SHALL BE POURED AT ALL CONNECTIONS.

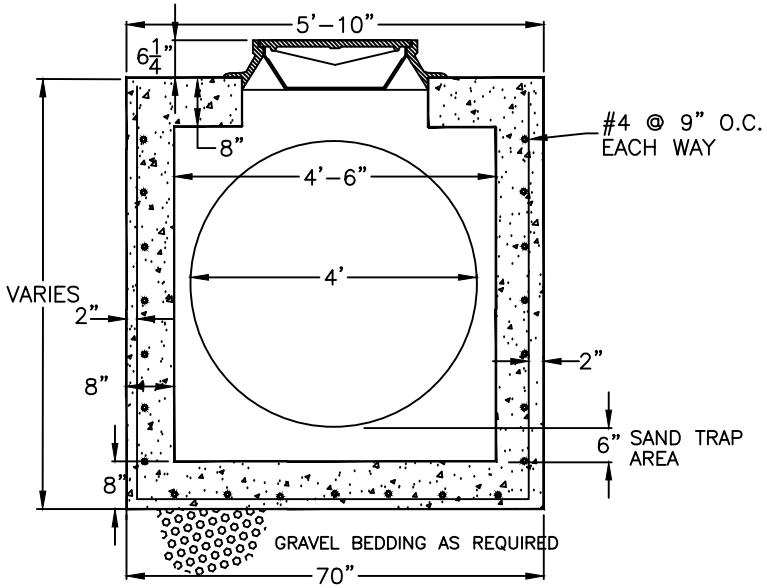

SECTION F

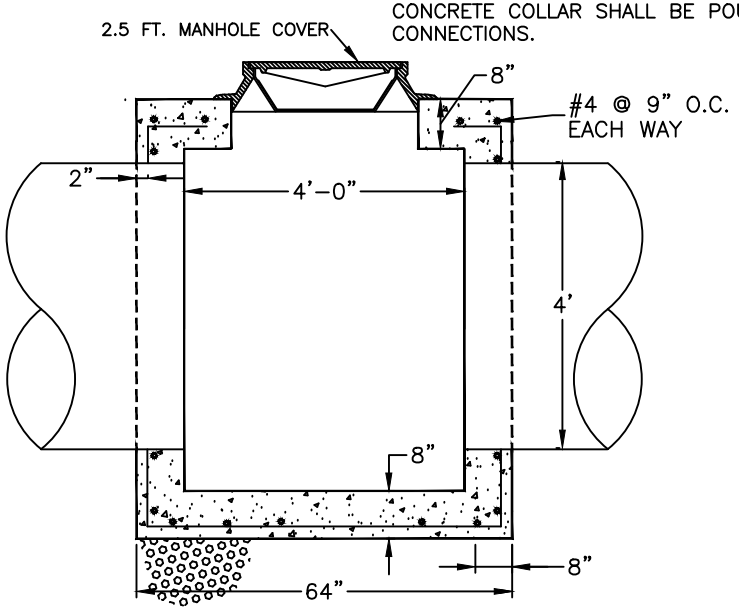

SECTION E

DRAWN BY DHR	Layton City	STANDARD DRAWING 48" CO BOX
SCALE NONE		
DATE 3/05		ST–SD–11
REVISIONS 7/11		

CLEANOUT BOX WITH MANHOLE LID

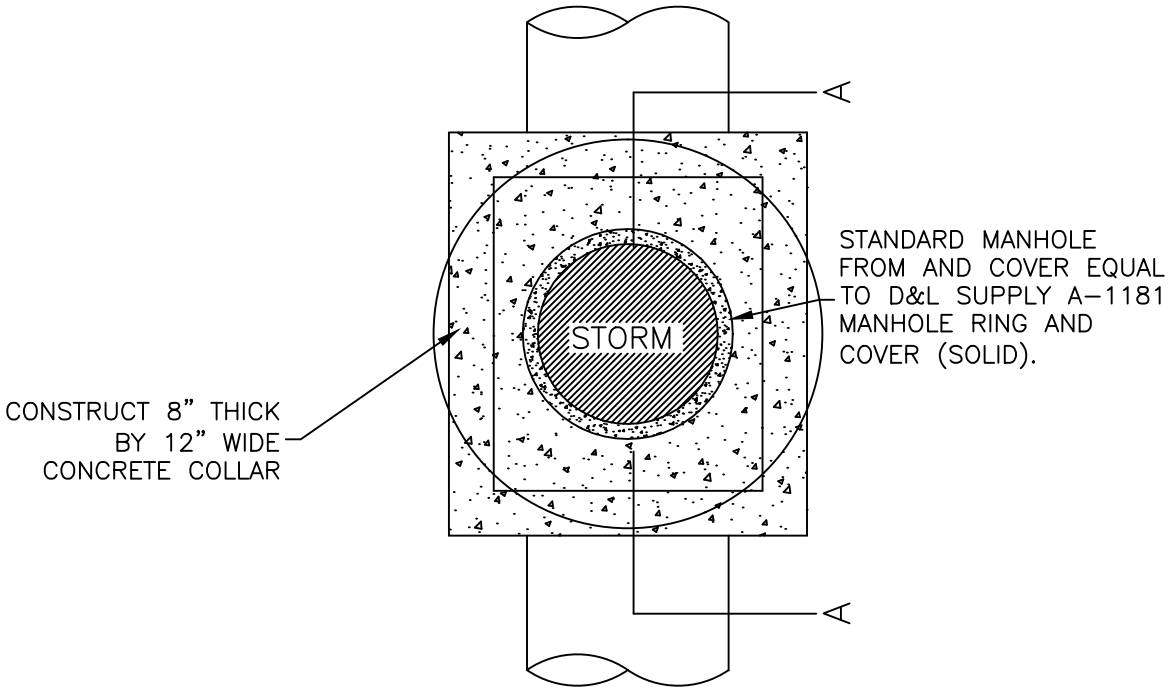

PLAN

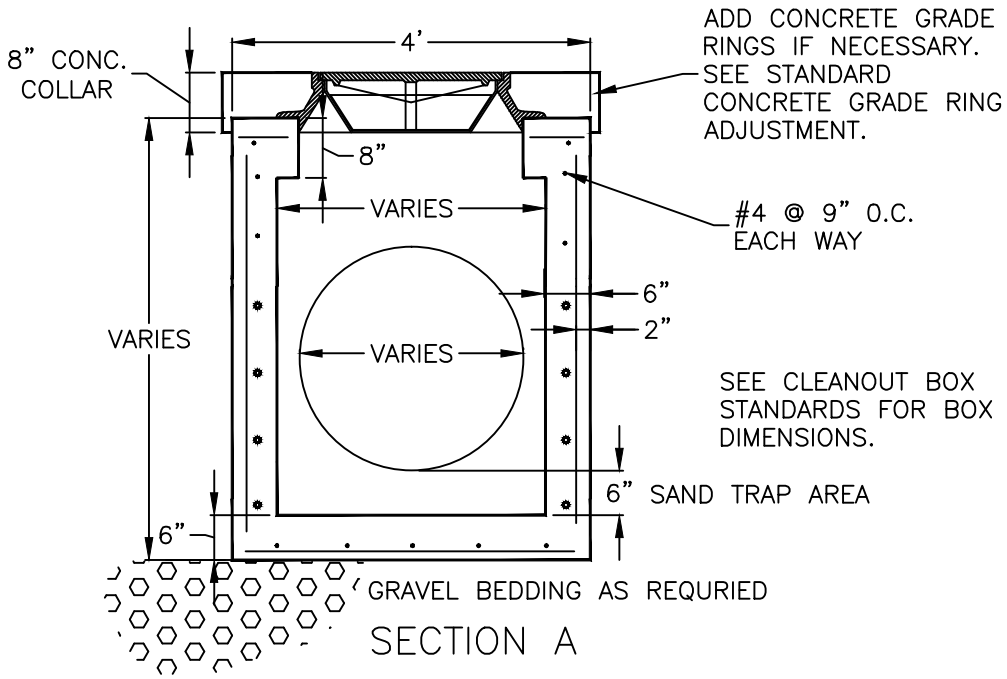

SECTION A

DRAWN BY DHR	Layton City	STANDARD DRAWING CO-MH-LID
SCALE NONE		
DATE 8/02		
REVISIONS		ST-SD-12

COMBINATION CLEANOUT/INLET BOX

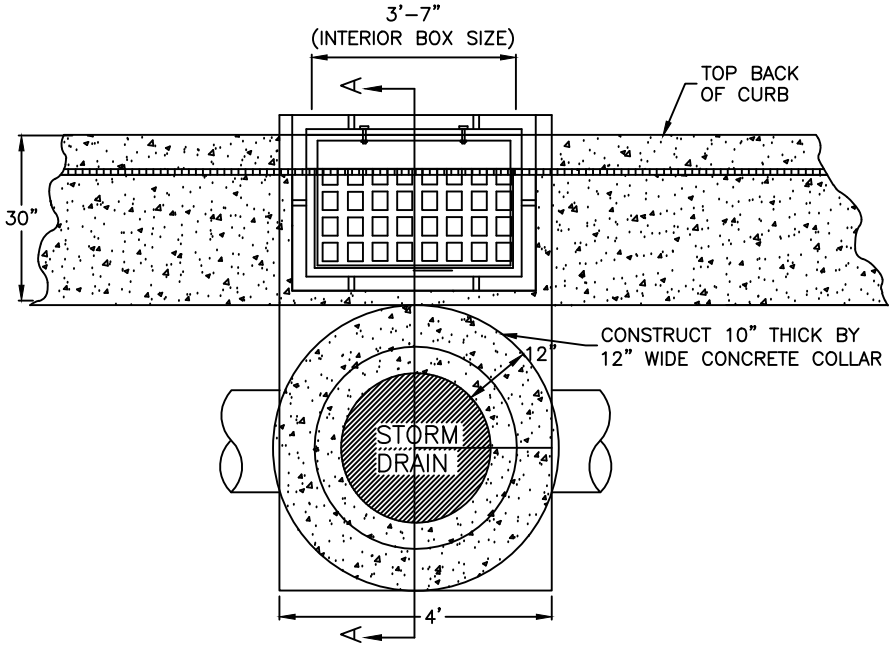

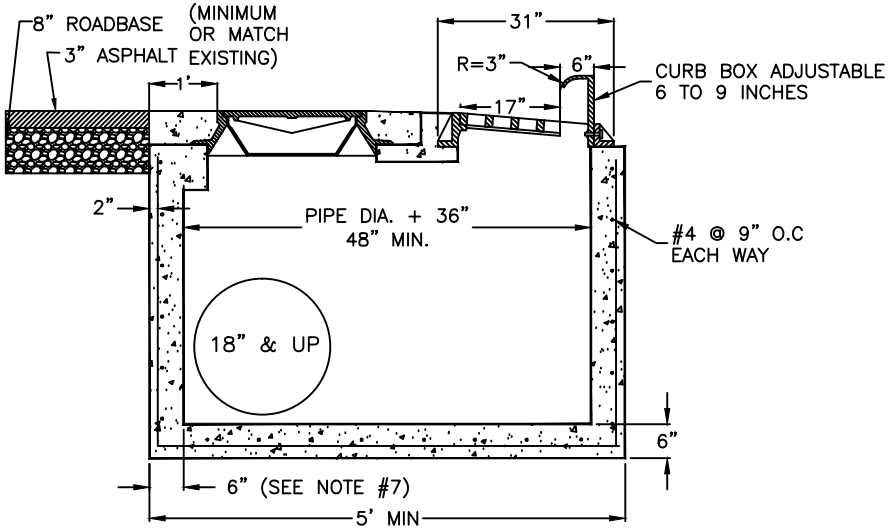

SECTION A

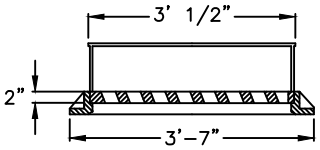

INLET FRAME AND GRATE
WITH ADJUSTABLE CURB BOX
(OLYMPIC FOUNDRY I-3517
OR ACCEPTABLE EQUAL)

NOTES:

1. ALL REINFORCEMENT SHALL BE #4 DEFORMED STEEL, GRADE 60 KSI PER APWA 03 20 00.

2. ALL REINFORCEMENT SHALL BE PLACED AT 9" O.C. EACH WAY IN THE FLOOR AND THE WALLS.

3. THE CLEANOUT COVER SHALL BE MODEL A-1181 AS MANUFACTURED BY D & L SUPPLY OR ACCEPTABLE EQUAL.

4. THE ADJUSTABLE CURB BOX INLET GRATE SHALL BE BICYCLE SAFE (OLYMPIC FOUNDRY I-3517 OR ACCEPTABLE EQUAL).

5. CONCRETE SHALL BE CLASS 4,000 PER APWA 03 30 04.

6. ALL PIPES IN THE BOX SHALL BE CUT WITH THE INTERIOR OF THE BOX AND GROUTED SMOOTH.

7. WALL THICKNESS SHALL BE INCREASED TO 8 INCHES FOR PIPES 36 INCHES AND LARGER.

8. REBAR SHALL HAVE 2" CLEAR ON EARTH SIDE OF STRUCTURE.

9. SEE ST-SD-01 STANDARD FOR EXACT HORIZONTAL LOCATION OF PIPE IN BOX.

10. FRAME MUST TOUCH WALL ON A MINIMUM OF 3 SIDES.

11. IF A PRECAST BOX HAS BEEN ALLOWED, A CONCRETE COLLAR SHALL BE POURED AT ALL CONNECTIONS.

DRAWN BY DHR	Layton City	STANDARD DRAWING COMBO
SCALE NONE		
DATE 8/02		ST-SD-13
REVISIONS 1/15		

COMBINATION CLEANOUT/DOUBLE INLET BOX

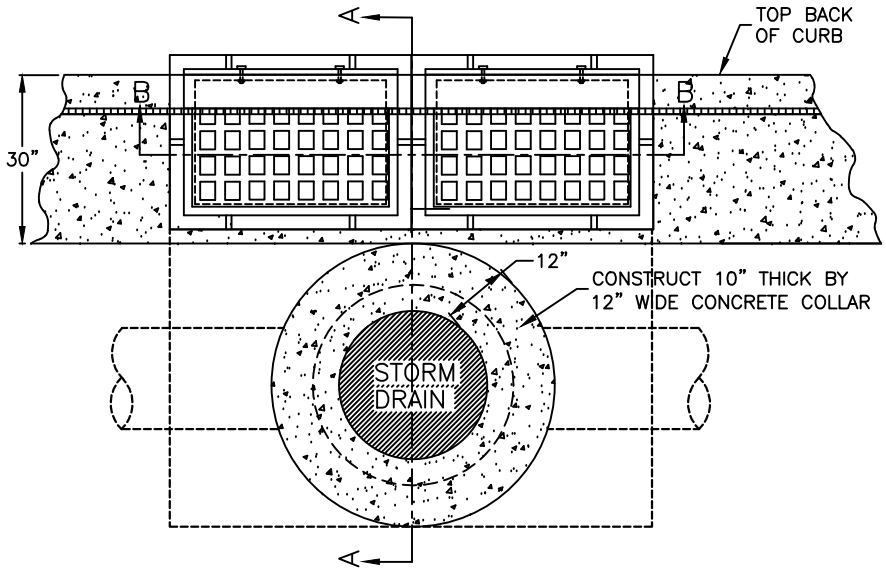

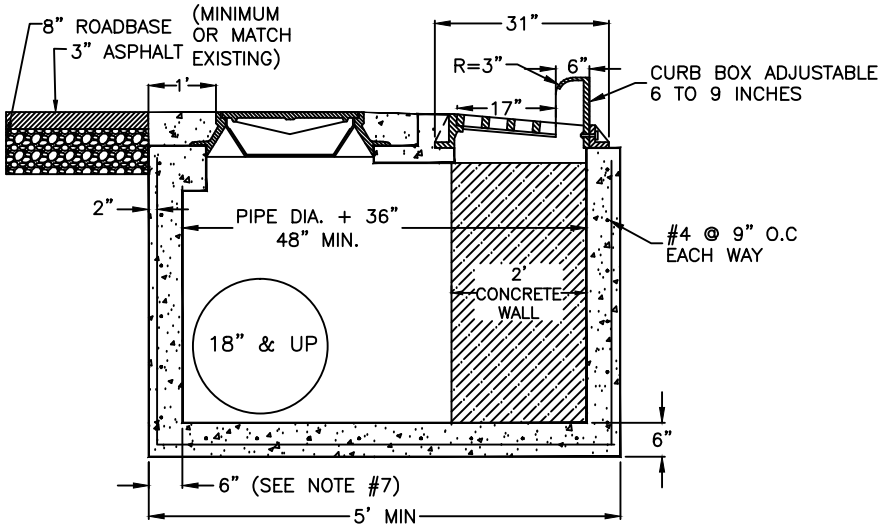

SECTION A

NOTES

1. ALL REINFORCEMENT SHALL BE #4 DEFORMED STEEL, GRADE 60 KSI PER APWA 03 20 00.

2. ALL REINFORCEMENT SHALL BE PLACED AT 9" O.C. EACH WAY IN THE FLOOR AND THE WALLS.

3. THE CLEANOUT COVER SHALL BE MODEL A–1181 AS MANUFACTURED BY D & L SUPPLY OR ACCEPTABLE EQUAL.

4. THE ADJUSTABLE CURB BOX INLET GRATE SHALL BE BICYCLE SAFE (OLYMPIC FOUNDRY I–3517 OR ACCEPTABLE EQUAL).

5. CONCRETE SHALL BE CLASS 4,000 PER APWA 03 30 04.

6. ALL PIPES IN THE BOX SHALL BE CUT WITH THE INTERIOR OF THE BOX AND GROUTED SMOOTH.

7. WALL THICKNESS SHALL BE INCREASED TO 8 INCHES FOR PIPES 36 INCHES AND LARGER.

8. REBAR SHALL HAVE 2" CLEAR ON EARTH SIDE OF STRUCTURE.

9. SEE ST–SD–01 STANDARD FOR EXACT HORIZONTAL LOCATION OF PIPE IN BOX.

10. FRAME MUST TOUCH THE WALLS ON A MINIMUM OF 3 SIDES.

11. IF A PRECAST BOX HAS BEEN ALLOWED, A CONCRETE COLLAR SHALL BE POURED AT ALL CONNECTIONS.

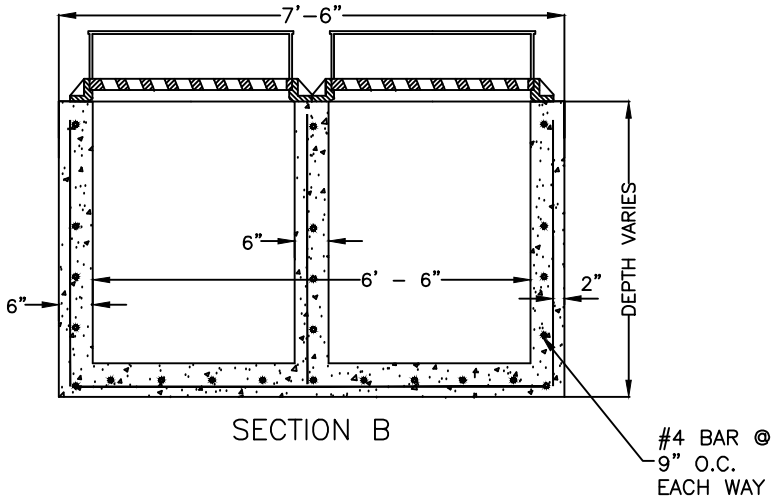

SECTION B

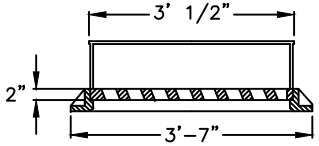

INLET FRAME AND GRATE
WITH ADJUSTABLE CURB BOX
(OLYMPIC FOUNDRY I–3517
OR ACCEPTABLE EQUAL)

DRAWN BY DHR	Layton City	STANDARD DRAWING COMBO–DI
SCALE NONE		
DATE 3/96		
REVISIONS 1/15		ST–SD–14

IRRIGATION DIVERSION BOX

24" X 42" TYPICAL CLEANOUT BOX

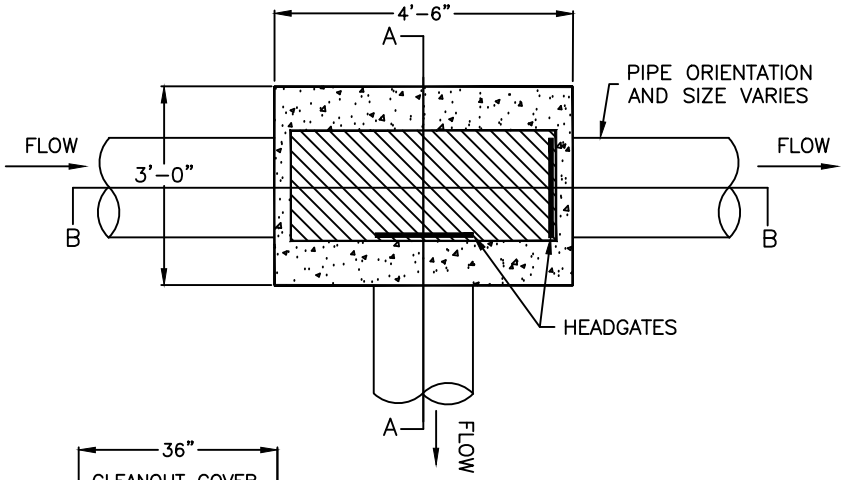

PLAN

NOTES

1. ALL REINFORCEMENT SHALL BE #4 DEFORMED STEEL, GRADE 60 KSI PER APWA 03 20 00.

2. ALL REINFORCEMENT WILL BE PLACED AT 9" O.C. EACH WAY IN THE FLOOR AND THE WALLS.

3. THE CLEANOUT COVER SHALL BE MODEL H-1801 AS MANUFACTURED BY D & L SUPPLY OR EQUAL (LID SIZE IS 20" X 48").

4. CONCRETE SHALL BE CLASS 4,000 APWA 03 30 04.

5. ALL PIPES IN THE BOX SHALL BE CUT FLUSH WITH THE INTERIOR OF THE BOX AND GROUTED SMOOTH.

6. REBAR SHALL HAVE 2" CLEAR ON EARTH SIDE OF STRUCTURE.

7. HEAD GATES MUST BE GALVANIZED STEEL WITH 14 GAUGE SLIDE GATES.

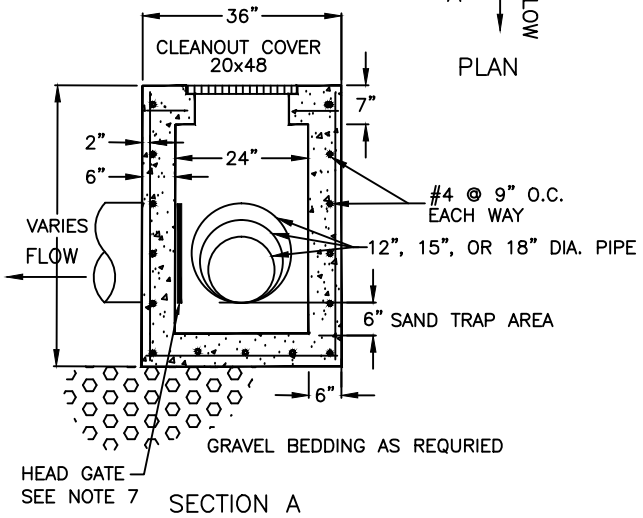

SECTION A

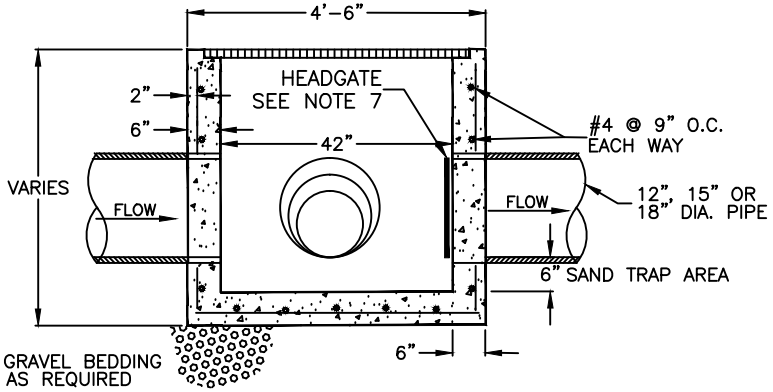

SECTION B

DRAWN BY DHR	Layton City	STANDARD DRAWING IRR-CO
SCALE NONE		
DATE 3/94		ST-SD-15
REVISIONS 3/03		

DETENTION POND INLET/OUTLET STRUCTURE (ORIFICE BOX)

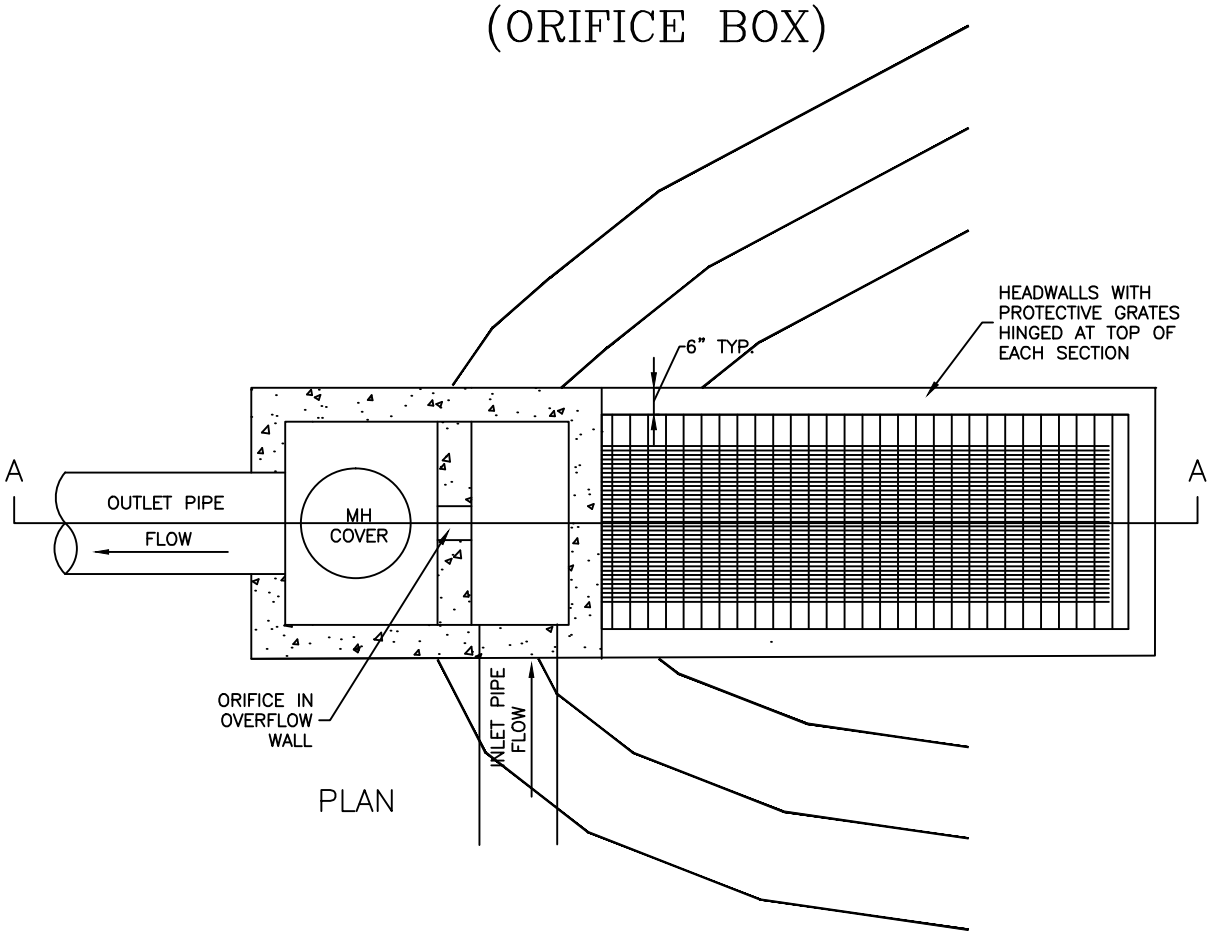

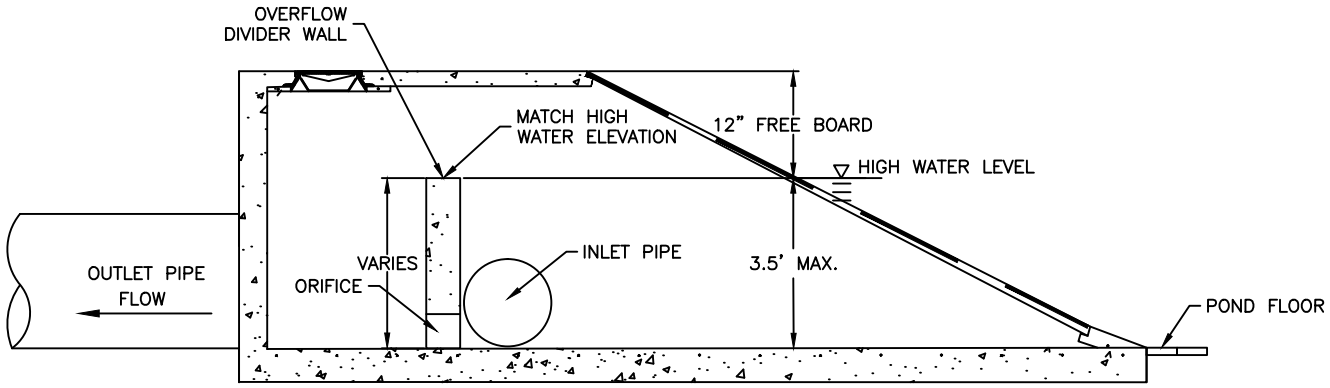

SECTION A

NOTES:

1. ALL REINFORCEMENT SHALL BE #4 DEFORMED STEEL, GRADE 60 KSI PER APWA 03 20 00.

2. CONCRETE SHALL BE CLASS 4,000 PER APWA 03 30 04.

3. ALL PIPES IN THE BOX SHALL BE CUT WITH THE INTERIOR OF THE BOX AND GROUTED SMOOTH.

4. PROTECTIVE GRATE SHALL BE BOLTED TO HEADWALLS, TYPICALLY 4.5' X 3' WITH 4" X 1" SPACED GRATING USING 2" X 3/16" GALVANIZED STEEL FLAT BAR.

DRAWN BY DHR	Layton City	STANDARD DRAWING
SCALE NONE		I/O STRUCTURE
DATE 9/01		ST–SD–16
REVISIONS 4/12		

STORM DRAIN & LAND DRAIN MANHOLE

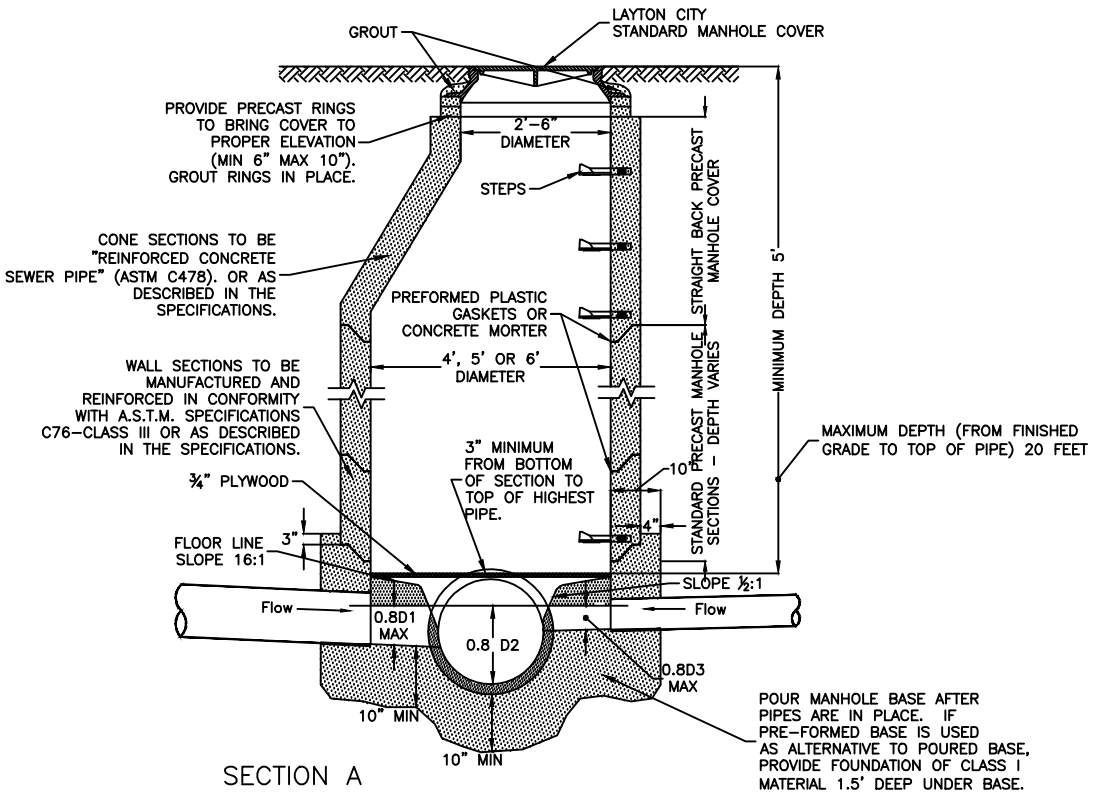

SECTION A

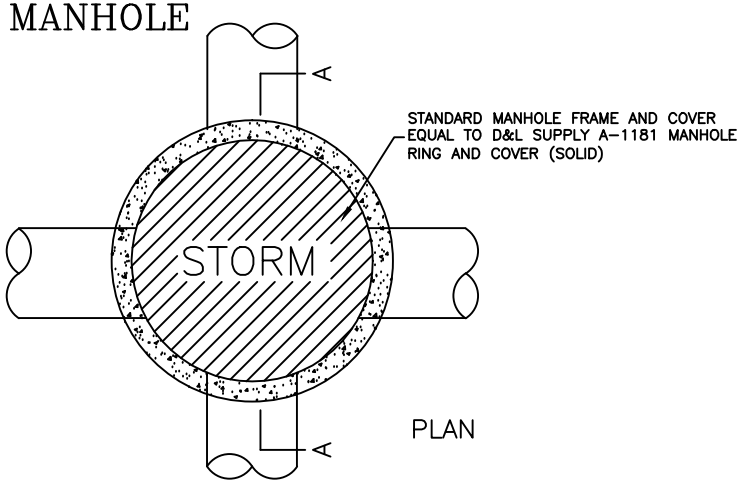

PLAN

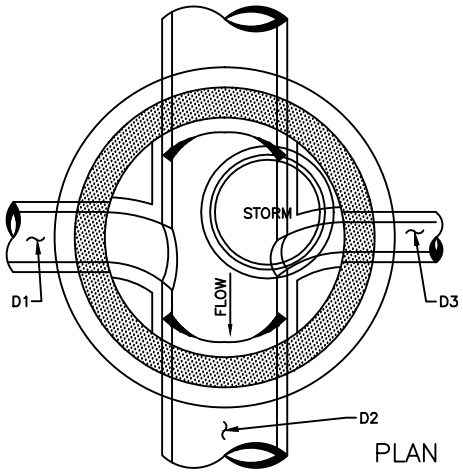

PLAN

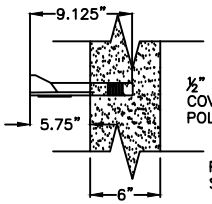

STEP DETAIL

1/2" GRADE 60 STEEL REINFORCEMENT COVERED WITH COPOLYMER POLYPROPYLENE PLASTIC

PROVIDE STEPS WHERE SHOWN IN PLAN.

NOTES:

1. ALL PIPES IN THE MANHOLE SHALL BE CUT FLUSH WITH THE INTERIOR OF THE MANHOLE AND GROUTED SMOOTH.

2. FURNISH AND INSTALL 3/4" PLYWOOD FALSE BOTTOM COVER IN ALL NEW OR EXISTING MANHOLES AROUND WHICH GRADING OR SURFACING IS BEING PERFORMED.

3. IF MANHOLE IS TO BE POURED IN PLACE FOLLOW SAME PATTERN AS SHOWN EXCEPT USE 8" MIN. WALL THICKNESS.

4. PROVIDE STUBS WHERE SHOWN ON THE PLAN DRAWINGS.

5. MANHOLES MAY BE 4', 5', OR 6' AS SHOWN ON THE PLAN DRAWINGS.

6. AFTER ALL GRADING AROUND MANHOLE HAS BEEN COMPLETED AND FINAL SURFACING IS IN PLACE, REMOVE DEBRIS AND TEMPORARY FALSE BOTTOM COVER.

DRAWN BY DHR	Layton City	STANDARD DRAWING SDMH
SCALE NONE		
DATE 9/93		ST-SD-17
REVISIONS 4/04		

MANHOLE COVER

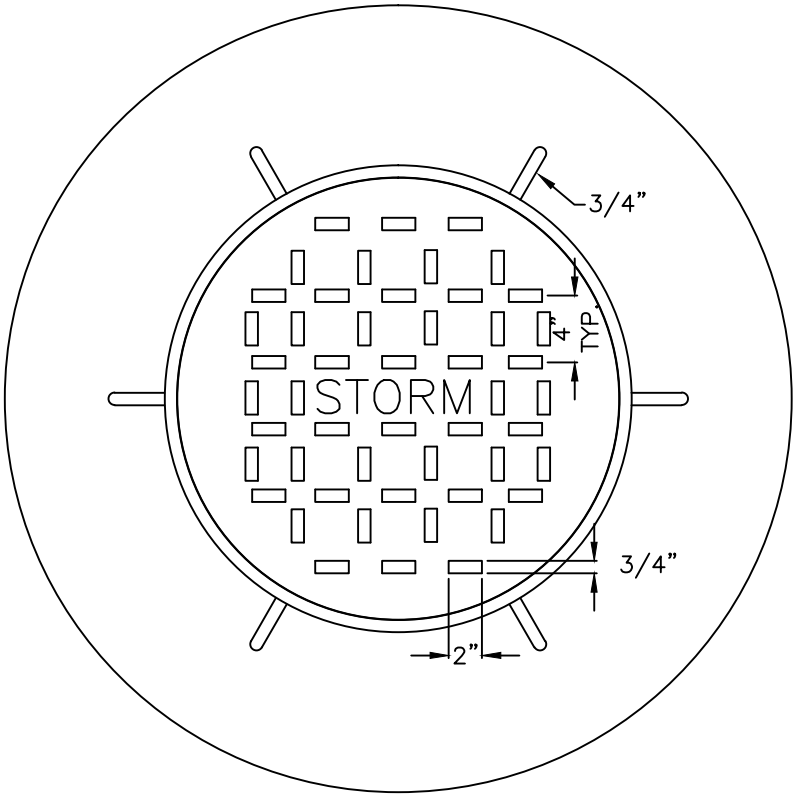

PLAN RING & COVER

STANDARD MANHOLE FRAME AND COVER EQUAL TO D&L SUPPLY A–1181 MANHOLE RING & COVER (SOLID)

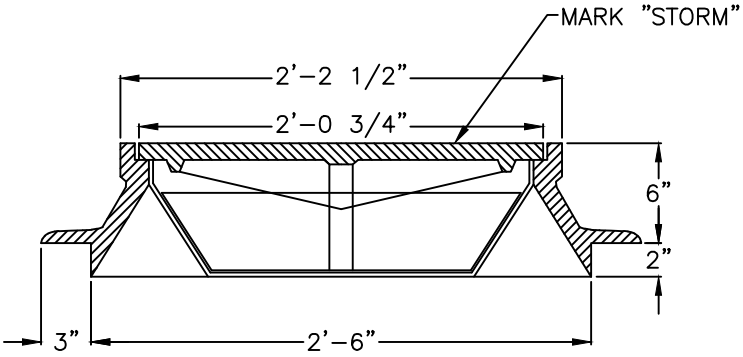

SECTION

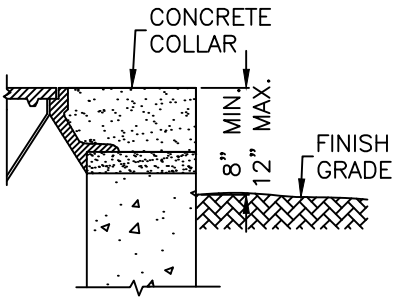

DETAIL
UNIMPROVED AREAS

NOTE: CONTRACTOR SHALL POUR A CONCRETE COLLAR (MIN. 12") AROUND THE CAST IRON RING, EVEN WHEN THE MANHOLE IS LOCATED IN AN UNIMPROVED LOCATION.

DRAWN BY DHR	Layton City	STANDARD DRAWING
SCALE NONE		SDMH–LID
DATE 1/00		ST–SD–18
REVISIONS		

TYPICAL FOOTING AND FOUNDATION SUBDRAIN

NOTES:
1. MINIMUM OF TWO CLEANOUTS REQUIRED IN THE FOLLOWING LOCATIONS:
   - WHERE THE LATERAL COMES TO THE HOME AND TEES OFF
   - ANYWHERE ALONG THE REAR PORTION OF THE HOUSE OPPOSITE OF THE GARAGE

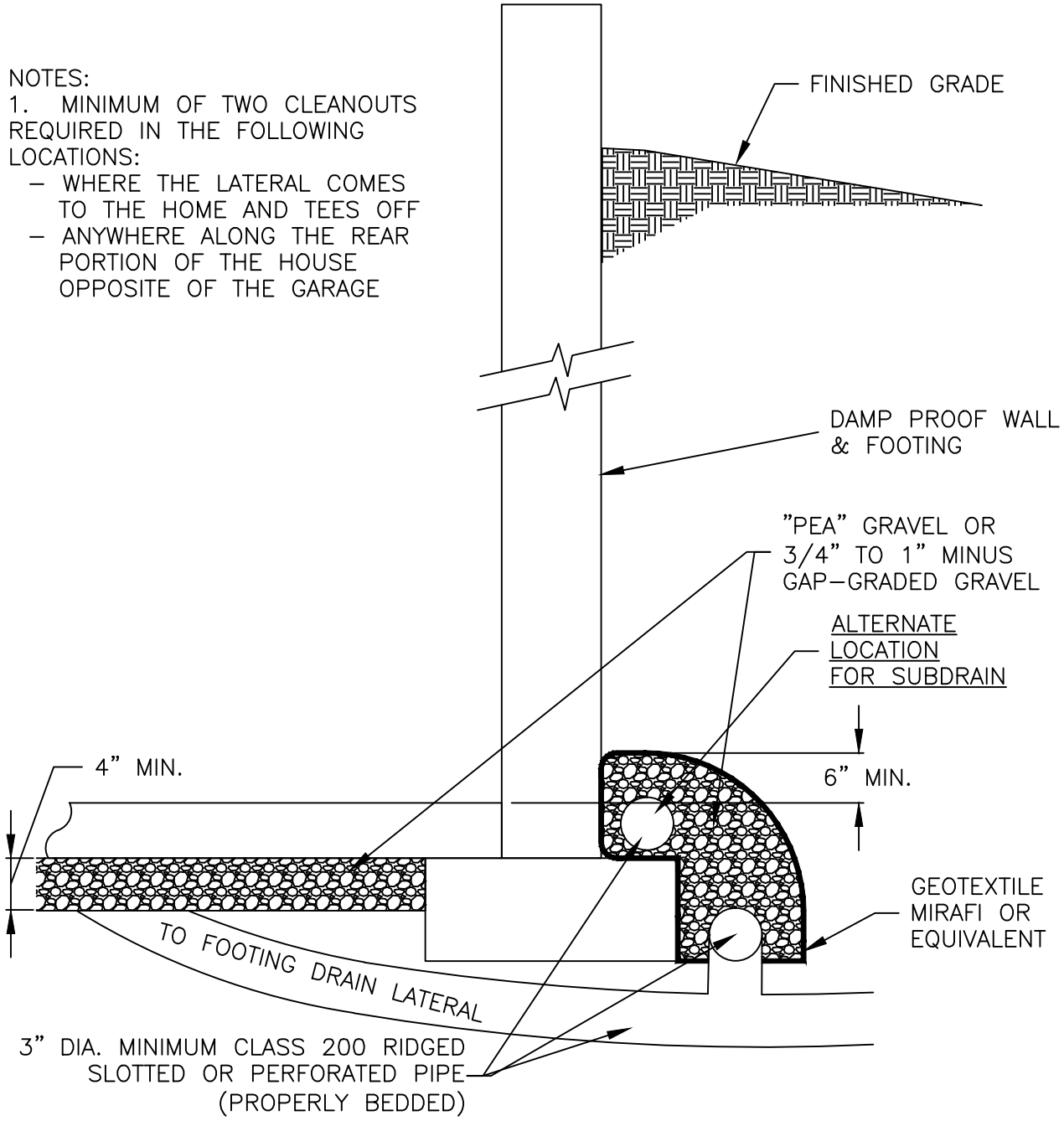

DRAWN BY DHR	Layton City	STANDARD DRAWING
SCALE NONE		FOOTING
DATE 10/03		ST-SD-19
REVISIONS DHR		

POND BERM CROSS SECTION

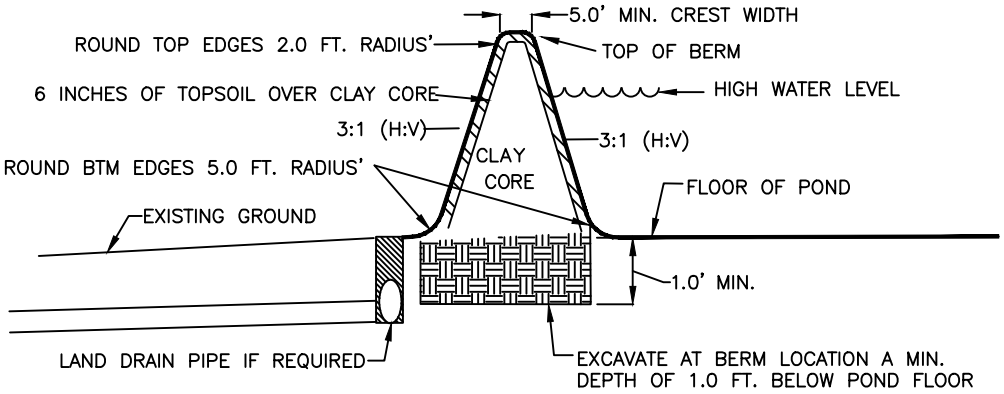

ADDITIONAL REQUIREMENTS FOR BERMS (GRADING, TESTING, EXCAVATION, BEDDING, BORROW MATERIAL, COMPACTION, ETC).

(1) THE EMBANKMENT SHALL BE CONSTRUCTED WITH IMPORTED CLAY (CL, BASED ON THE UNIFIED SOIL CLASSIFICATION) HAVING THE FOLLOWING PROPERTIES: LIQUID LIMIT INDEX OF 50 (MAXIMUM) TO 30 (MINIMUM), AND PLASTICITY INDEX OF 25 (MAXIMUM) TO 13 (MINIMUM), AT A 3 FOOT HORIZONTAL TO 1 FOOT VERTICAL SLOPE. SLOPES WHICH ARE CONSTRUCTED IN AREAS WHERE THE EXCAVATION WILL EXTEND BELOW THE CURRENT WATER LEVEL REQUIRE THE INSTALLATION OF AN 8 INCH PVC SDR–35 D–3034 PIPE TO INTERCEPT THE WATER PRIOR TO REACHING THE SLOPE. THIS DRAIN LINE PROVIDES THE DEWATERING AND SLOPE STABILIZATION TYPICALLY REQUIRED BY THE SOILS REPORT.

(2) PRIOR TO PLACING GRADING FILL AND FILL FOR EMBANKMENTS, REMOVE THE EXISTING SURFACE ORGANIC MATERIAL, SOD, TOPSOIL AND OTHER DELETERIOUS MATERIALS.

(3) THE BASE OF THE CLAY EMBANKMENTS SHALL BE ESTABLISHED A MINIMUM OF 1 FOOT BELOW THE ADJACENT GROUND ELEVATION. PRIOR TO PLACEMENT OF FILL, THE EXPOSED EMBANKMENT SUBGRADE SHALL BE OBSERVED BY LAYTON CITY.

(4) EMBANKMENT FILL SHALL BE COMPACTED AT A MOISTURE CONTENT WITHIN 2% OF OPTIMUM, (DRYING OF THE SOIL MAY BE REQUIRED), PLACED IN 8 INCH LIFTS, IN HORIZONTAL LAYERS AND COMPACTED WITH A MEDIUM TO HEAVY WEIGHT SEGMENTED PAD OR SHEEP'S FOOT ROLLER TO A MINIMUM OF 95% OF THE MAXIMUM DRY DENSITY AS DETERMINED BY ASTM D–698 BEFORE PLACING THE SUBSEQUENT LIFT.

(5) FILL PLACEMENT SHALL BE CONTINUOUS TO MAINTAIN CONSTANT MOISTURE CONTENT. IF EMBANKMENTS ARE CONSTRUCTED WITH SIGNIFICANT TIME PERIODS BETWEEN PLACEMENT OF LIFTS, THE UPPER 6 INCHES OF THE FILL SURFACE SHALL BE SCARIFIED, MOISTURE CONDITIONED, AND RECOMPACTED, AS RECOMMENDED ABOVE, BEFORE PLACING AND COMPACTING THE SUBSEQUENT LIFT.

(6) EMBANKMENT COMPACTING AND MOISTURE CONTENT SHALL BE EVALUATED DURING CONSTRUCTION THROUGH VISUAL OBSERVATION AND FIELD TESTING WITH A NUCLEAR DENSITY GAUGE.

(7) INTERIOR AND EXTERIOR EMBANKMENT SLOPES SHALL BE CONSTRUCTED NO STEEPER THAN 3H:1V.

(8) EMBANKMENTS SHALL HAVE A MINIMUM CREST WIDTH OF 5 FEET. THE CREST SHALL BE SLOPED AT A MINIMUM OF 1% TOWARD THE POND.

(9) THE EMBANKMENTS SHALL BE OVER BUILT A MINIMUM OF 2 FEET, AND THEN TRIMMED BACK TO THEIR FINAL SLOPE CONFIGURATION (DUE TO DIFFICULTY IN COMPACTION THE OUTER PORTION OF SLOPING FILLS).

(10) THE BERM EDGES SHALL BE ROUNDED TO A MINIMUM OF A 5–FOOT RADIUS AT THE BOTTOM AND 2–FOOT RADIUS AT THE TOP.

(11) 6" OF TOPSOIL SHALL BE PLACED OVER CLAY CORE BERMS FOR LANDSCAPING SOD.

(12) COMPACTION TESTING SHALL OCCUR EVERY 100 FEET ALONG THE CENTERLINE OF THE BERM FOR EACH LIFT.

DRAWN BY DHR	Layton City	STANDARD DRAWING
SCALE NONE		POND BERM
DATE 9/08		ST–SD–20
REVISIONS		

STORM DRAIN DETENTION BASIN SPRINKLING SYSTEM SPECIFICATIONS FOR CITY PONDS

NOTES:

1. FOR LARGE RECTANGLE VALVE BOXES, INSTALL CARSON–BROOKS PLASTICS, INC. MODEL NUMBER 1220–4 NON BOLT T–COVER AND MODEL 1220–12 BOX IN GREEN.
2. FOR SMALL CIRCULAR VALVE BOXES, INSTALL CARSON–BROOKS PLASTICS, INC. MODEL 910–2 NON BOLT COVER AND MODEL 910–10 BODY IN GREEN.
3. FOR QUICK COUPLING VALVES, INSTALL RAIN BIRD QUICK COUPLING VALVES. 1" MMINIMUM.
4. FOR CONTROL VALVES, INSTALL RAIN BIRD EFB–CP–R SERIES VALVES.
5. FOR CONTROLLERS, INSTALL RAIN BIRD ESP–MC SERIES OUTDOOR CONTROLLER.
6. FOR SPRAY HEADS, INSTALL RAIN BIRD IRRIGATION PRODUCTS. DESIGN SYSTEM FOR HEAD TO HEAD COVERAGE.
7. FOR PIPE, INSTALL PWpoly POLY–LD P.R. 125 PSI SCHEDULE 40 PIPE, MATERIAL IS LINEAR LOW DENSITY POLYETHYLENE PE 1404 AND MEETS CELL CLASS 123110C.
8. INSTALL BACKFLOW PREVENTION ON ALL SPRINKLER SYSTEMS CONNECTED TO CULINARY WATER AS REQUIRED BY LAYTON CITY AND UTAH DIVISION OF DRINKING WATER STANDARDS.

DRAWN BY SH	Layton City	STANDARD DRAWING
SCALE NONE		SDBASIN SPRINKLER
DATE 6/06		ST–SD–21
REVISIONS		

COMBINATION CLEANOUT/INLET BOX IN A WATERWAY

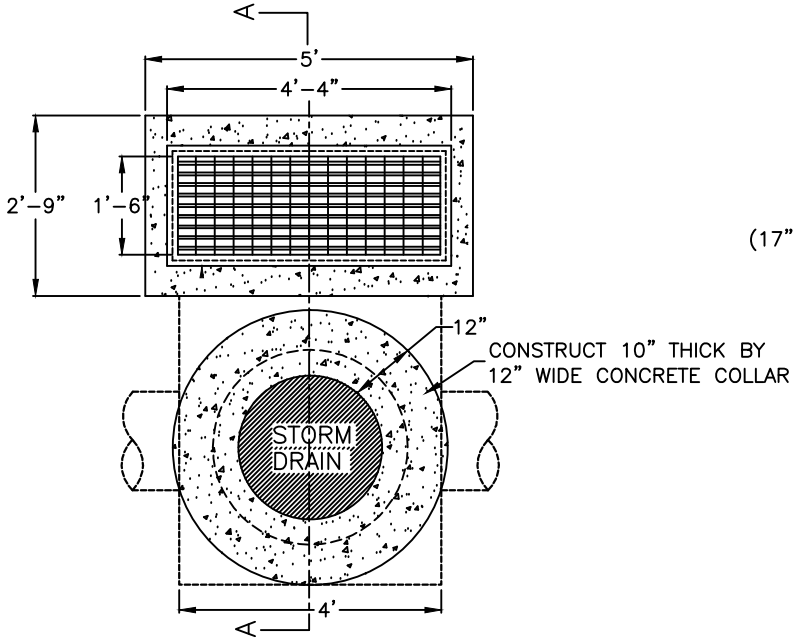

PLAN VIEW

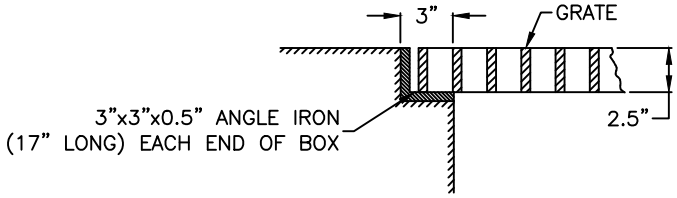

LEDGE DETAILS

WATERWAY INLET
GRATE

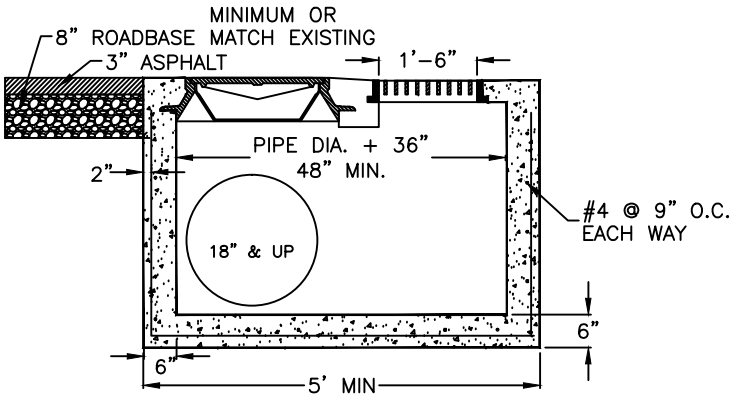

SECTION A

NOTES:

1. ALL REINFORCEMENT SHALL BE #4 DEFORMED STEEL, GRADE 60 KSI PER APWA 03 20 00.

2. ALL REINFORCEMENT SHALL BE PLACED AT 9" O.C. EACH WAY IN THE FLOOR AND THE WALLS.

3. THE CLEANOUT COVER SHALL BE MODEL A-1181 AS MANUFACTURED BY D & L SUPPLY OR ACCEPTABLE EQUAL.

4. THE ADJUSTABLE CURB BOX INLET GRATE SHALL BE BICYCLE SAFE (OLYMPIC FOUNDRY I-3517 OR ACCEPTABLE EQUAL).

5. CONCRETE SHALL BE CLASS 4,000 PER APWA 03 30 04.

6. ALL PIPES IN THE BOX SHALL BE CUT WITH THE INTERIOR OF THE BOX AND GROUTED SMOOTH.

7. REBAR SHALL HAVE 2" CLEAR ON EARTH SIDE OF STRUCTURE.

8. IF A PRECAST BOX HAS BEEN ALLOWED, A CONCRETE COLLAR SHALL BE POURED AT ALL CONNECTIONS.

DRAWN BY DHR	Layton City	STANDARD DRAWING COMBO-WWY
SCALE NONE		
DATE 6/98		ST-SD-22
REVISIONS		

INLET BOX – 15" PIPE
WITH STUB TO IRRIGATION DITCH

CURB & GUTTER PLAN

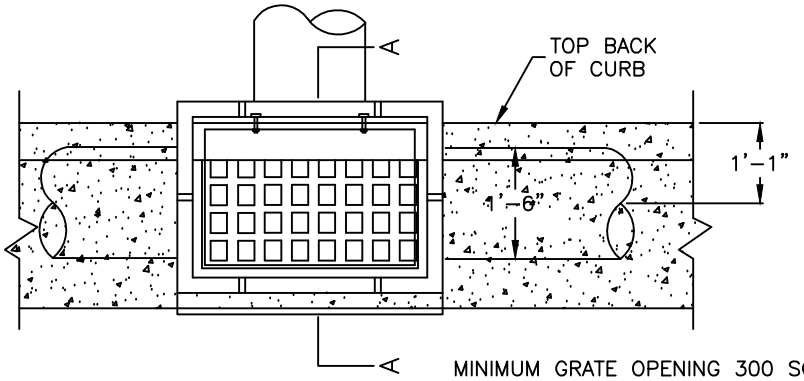

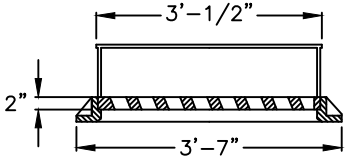

INLET FRAME AND GRATE WITH
ADJUSTIBLE CURB BOX
(OLYMPIC FOUNDRT I–3517 OR
ACCEPTABLE EQUAL)

* INTERIOR BOX SIZE 2' X 3'

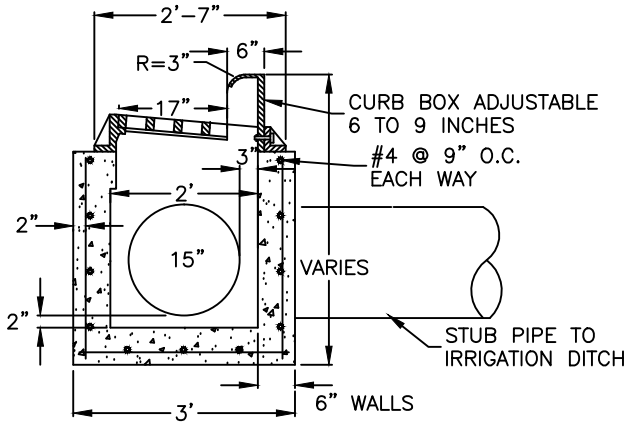

SECTION A

NOTES:

1. ALL REINFORCEMENT SHALL BE #4 DEFORMED STEEL, GRADE 60 KSI PER APWA 03 20 00.

2. ALL REINFORCEMENT SHALL BE PLACED AT 9" O.C. EACH WAY IN THE FLOOR AND THE WALLS.

3. THE ADJUSTABLE CURB BOX INLET GRATE SHALL BE BICYCLE SAFE. OLYMPIC FOUNDRY I–3517 OR ACCEPTABLE EQUAL.

3A. THE WATERWAY INLET GRATE SHALL BE BICYCLE SAFE AND SHALL BE SET ON 3" X 3" X 1/2" ANGLE IRON SUPPORTS CAST IN EACH END OF THE BOX. D & L SUPPLY I–1805 OR ACCEPTABLE EQUAL. (SEE LARGE DETAIL)

4. CONCRETE SHALL BE CLASS 4,000 PER APWA 03 30 04.

5. ALL PIPES IN THE BOX SHALL BE CUT WITH THE INTERIOR OF THE BOX AND GROUTED SMOOTH.

6. REBAR SHALL HAVE 2" CLEAR ON EARTH SIDE OF STRUCTURE.

DRAWN BY DHR	Layton City	STANDARD DRAWING IB–DITCH
SCALE NONE		
DATE 3/96		
REVISIONS 10/97		ST–SD–23

8 INCH DRAIN LINE INSTALLATION FOR SLOPE STABILIZATION/DEWATERING

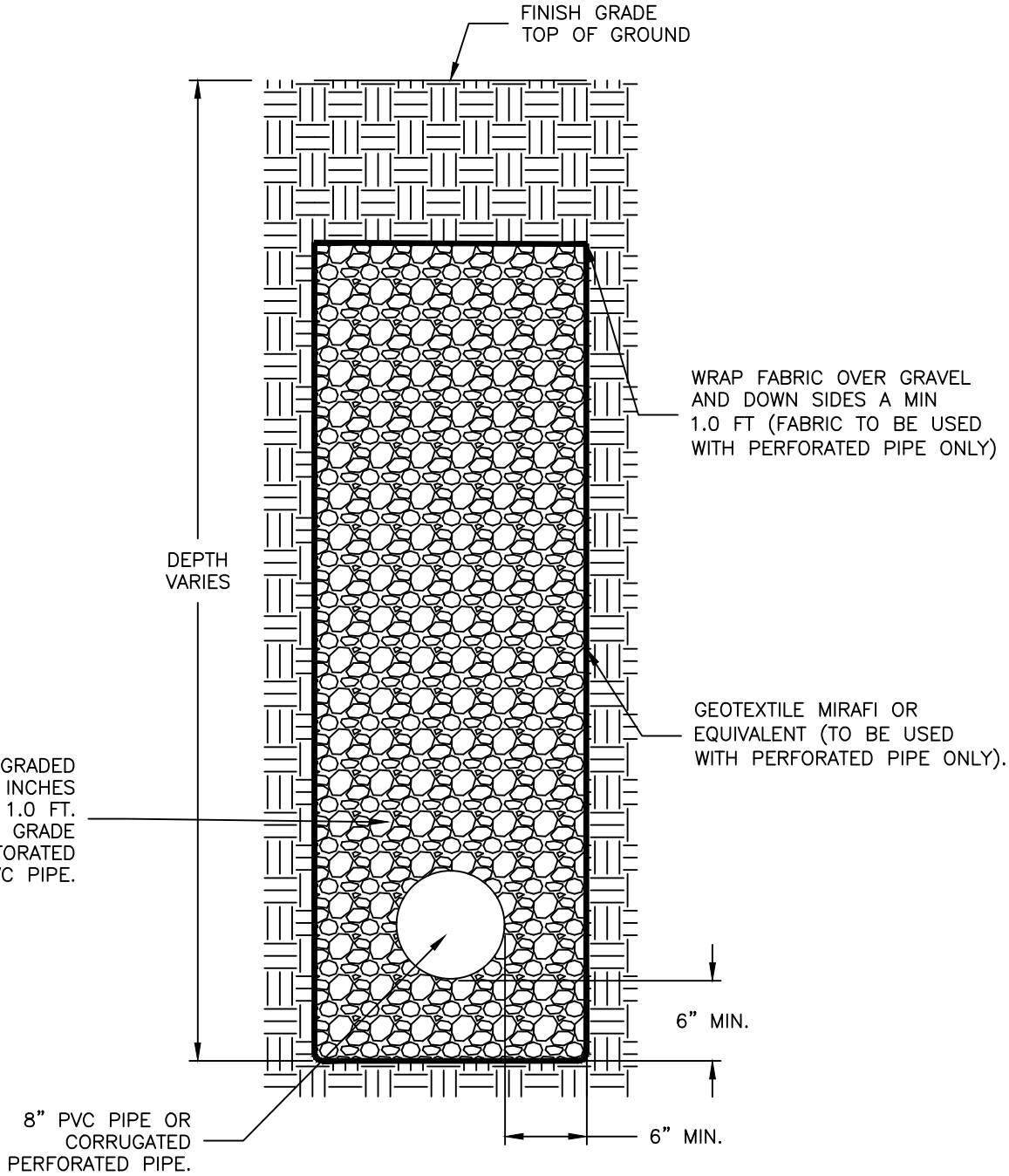

DRAWN BY DHR	Layton City	STANDARD DRAWING
SCALE NONE		8" PERF
DATE 4/04		ST-SD-24
REVISIONS		